US 20060290594A1

(19) United States

(12) Patent Application Publication

(10) Pub. No.: US 2006/0290594 A1

(43) Pub. Date: Dec. 28, 2006

Engel et al.

(54) MULTILAYER VIDEO SCREEN

(76) Inventors: **Gabriel Darmon Engel**, Hamilton (NZ); **Gareth paul Bell**, Hamilton (NZ)

Correspondence Address:
DUANE MORRIS LLP
PO BOX 5203
PRINCETON, NJ 08543-5203 (US)

(21) Appl. No.: 10/521,413

(22) PCT Filed: Jul. 15, 2003

(86) PCT No.: PCT/NZ03/00153

(30) Foreign Application Priority Data

Jul. 15, 2002 (NZ) 520132

Publication Classification

(51) Int. Cl.
G09G 5/00 (2006.01)

(52) U.S. Cl. 345/4

(57) ABSTRACT
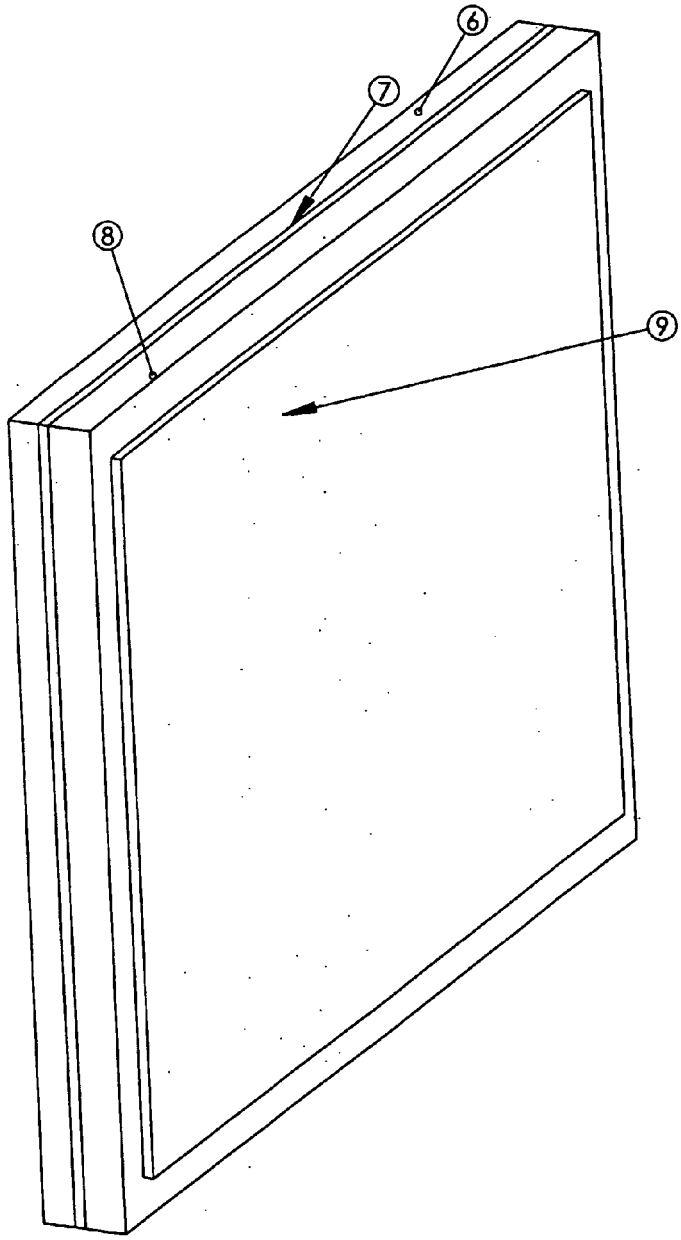
A display device comprising at least two display layers at least in part overlapping in which at least one of said display layers has a dissimilar configuration to the other display layer(s) such that moiré interference is reduced.