US 20080017794A1

(19) United States

(12) Patent Application Publication

Verbeck

(10) Pub. No.: US 2008/0017794 A1

(43) Pub. Date: Jan. 24, 2008

(54) COAXIAL RING ION TRAP

(75) Inventor: **Guido Fridolin Verbeck**, Plano, TX (US)

Correspondence Address:
HAYNES AND BOONE, LLP
901 Main Street, Suite 3100
Dallas, TX 75202

(73) Assignee: **Zyvex Corporation**, Richardson, TX (US)

(21) Appl. No.: **11/458,254**

(22) Filed: **Jul. 18, 2006**

Publication Classification

(51) **Int. Cl.**
H01J 49/42 (2006.01)

(52) **U.S. Cl.** **250/292**

(57) **ABSTRACT**
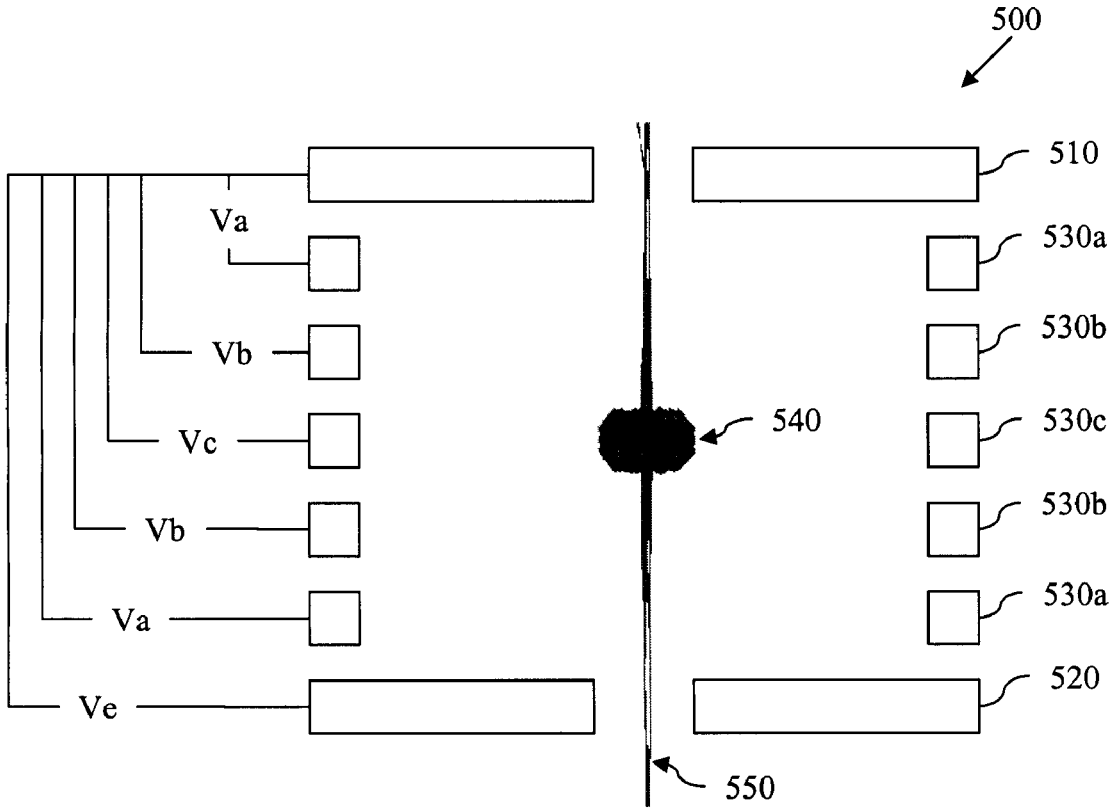
An apparatus that is or includes an ion trap, wherein the ion trap comprises an injection endcap, an extraction endcap, a plurality of ring electrode segments collectively positioned in substantially coaxial alignment between the injection and extraction endcaps, and a plurality of insulators each interposing neighboring ones of the plurality of ring electrode segments.