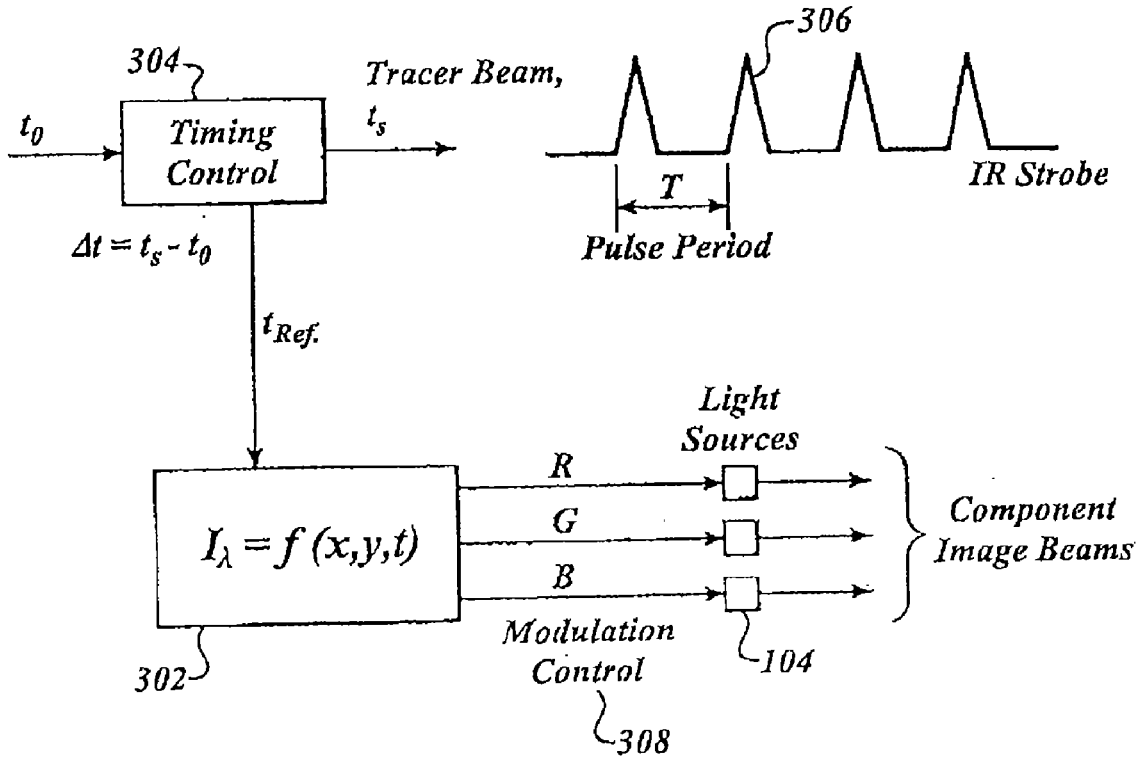
304
Timing Control
t_0
Tracer Beam, t_s
306
T
Pulse Period
IR Strobe
$\Delta t = t_s - t_0$
$t_{Ref.}$
Light Sources
R
G
B
$I_\lambda = f(x,y,t)$
Component Image Beams
302
Modulation Control
104
308

FIG.3