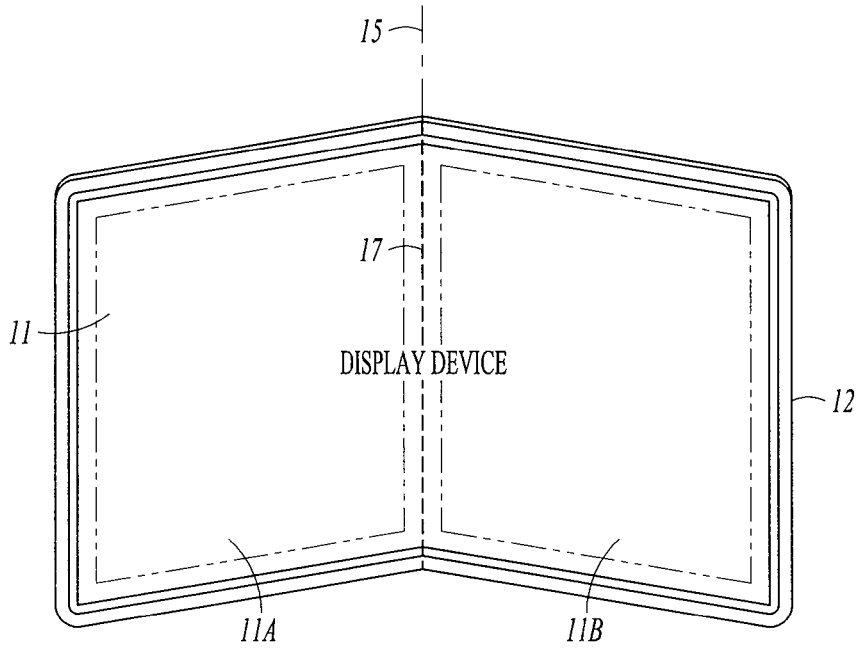
15
17
11
DISPLAY DEVICE
12
11A
11B

FIG. 1B

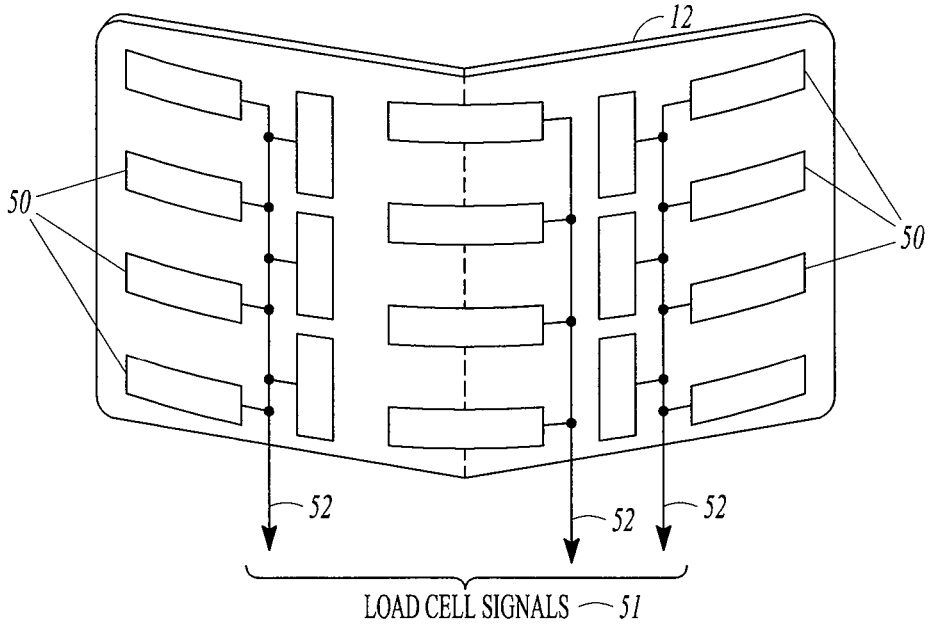
12
50
50
52
52
52
LOAD CELL SIGNALS
51

FIG. 2