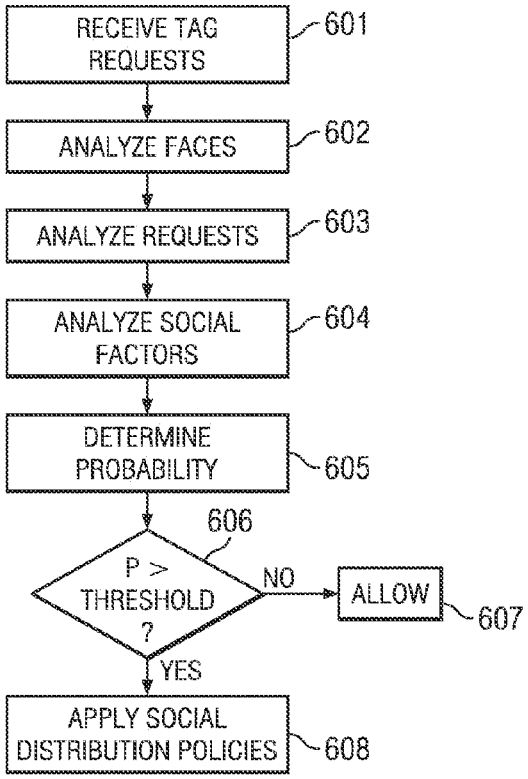
RECEIVE TAG REQUESTS
601
ANALYZE FACES
602
ANALYZE REQUESTS
603
ANALYZE SOCIAL FACTORS
604
DETERMINE PROBABILITY
605
606
P > THRESHOLD ?
NO
ALLOW
607
YES
APPLY SOCIAL DISTRIBUTION POLICIES
608

FIG. 6

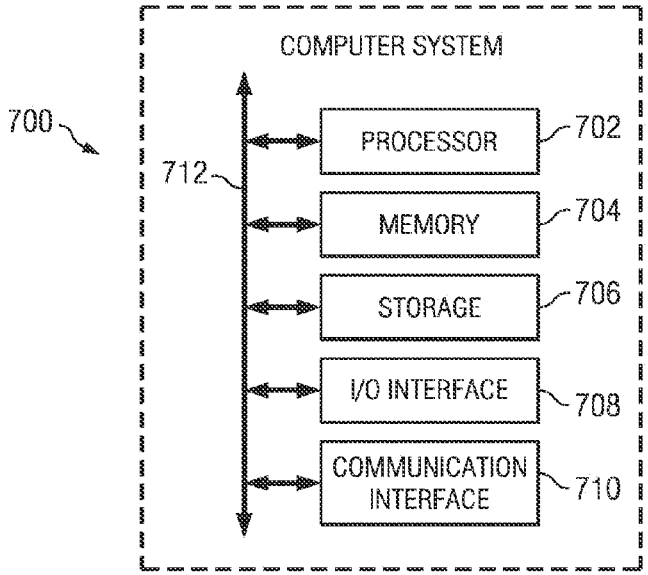
COMPUTER SYSTEM
700
712
PROCESSOR
702
MEMORY
704
STORAGE
706
I/O INTERFACE
708
COMMUNICATION INTERFACE
710

FIG. 7