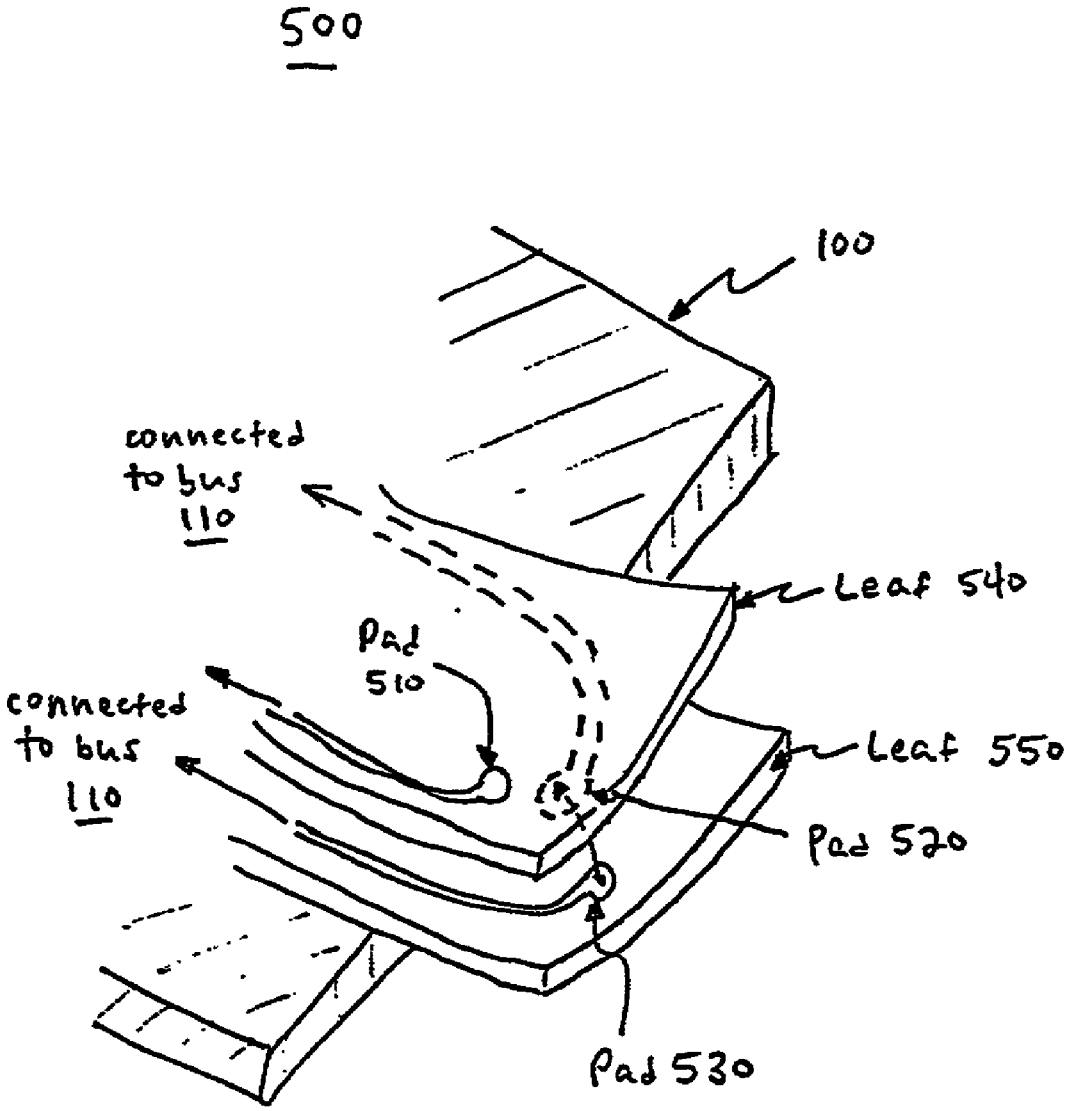
500
100
connected to bus 110
Leaf 540
Pad 510
connected to bus 110
Leaf 550
Pad 520
Pad 530

FIG. 4A