US 20040196595A1

(19) United States

(12) Patent Application Publication

(10) Pub. No.: US 2004/0196595 A1

(43) Pub. Date: Oct. 7, 2004

Gambino et al.

(54) MAGNETORESISTIVE SENSOR WITH MAGNETOSTATIC COUPLING OF MAGNETIC REGIONS

(76) Inventors: **Richard Joseph Gambino**, Stony Brook, NY (US); **Thomas Penney III**, South Salem, NY (US); **John Casimir Slonczewski**, Katonah, NY (US)

Correspondence Address:
ROBERT TREPP
IBM CORP - TJ WATSON RSCH CTR
PO BOX 218
YORKTOWN HEIGHTS, NY 10598 (US)

(21) Appl. No.: **10/827,080**

(22) Filed: **Apr. 19, 2004**

Related U.S. Application Data

(62) Division of application No. 10/193,497, filed on Jul. 11, 2002, now Pat. No. 6,775,109, which is a division of application No. 08/414,865, filed on Mar. 31, 1995, now Pat. No. 6,510,031.

Publication Classification

(51) **Int. Cl.**[7] **G11B 5/39**

(52) **U.S. Cl.** **360/324**; 29/603.14

(57) **ABSTRACT**
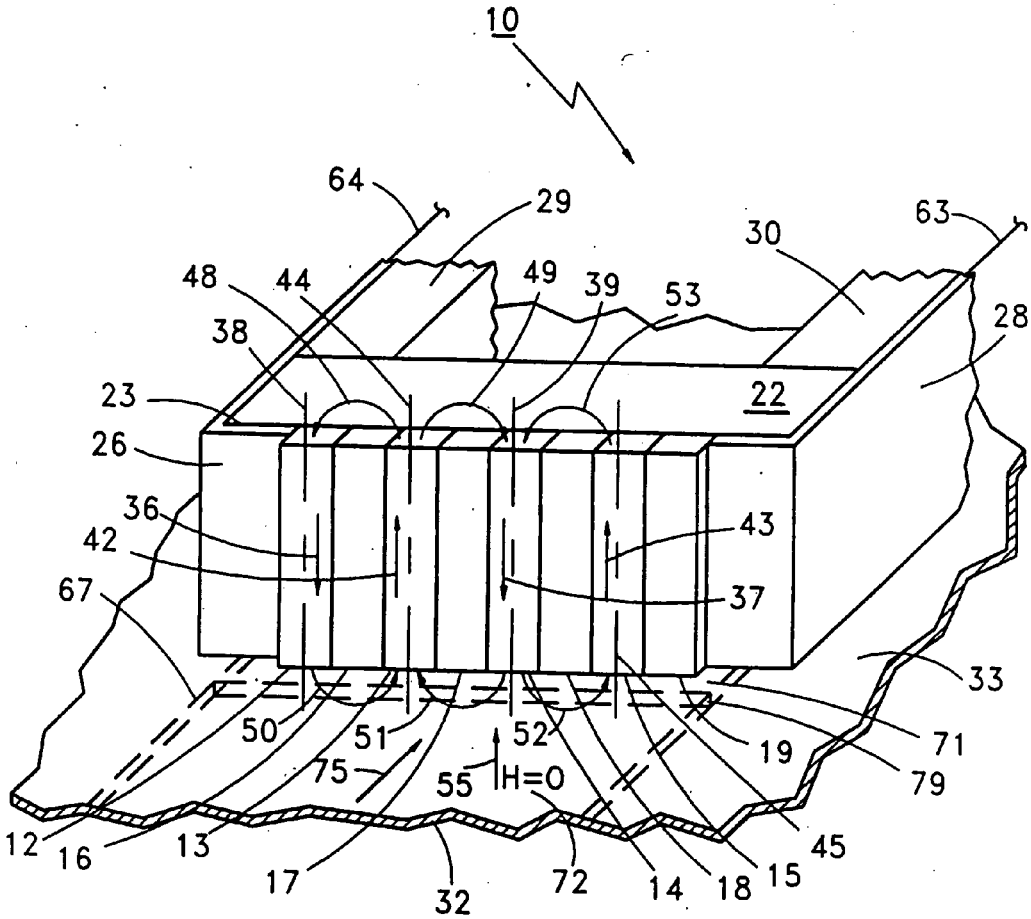
A magnetic field sensor is described incorporating a plurality of magnetic stripes spaced apart on the surface of a substrate such that the stray magnetic fields at the ends of the magnetic stripes are magnetostatically coupled and the magnetic stripes are magnetized respectively in alternating directions, nonmagnetic conductive material positioned in the spaces between the magnetic stripes and electrodes for passing current crosswise through the plurality of magnetic stripes to detect a change in resistance by the giant magnetoresistive effect (MGR). The invention overcomes the problem of detecting low magnetic fields since the magnetic fields required to saturate magnetic stripes depends on the magnetostatic coupling which in turn can be controlled by the geometry and position of the magnetic stripes in the sensor.