US 20050206095A1

(19) United States

(12) Patent Application Publication

(10) Pub. No.: US 2005/0206095 A1

(43) Pub. Date: Sep. 22, 2005

Keefe et al.

(54) DISCRETE ACTIVE SEAL ASSEMBLIES

(76) Inventors: **Andrew C. Keefe**, Santa Monica, CA (US); **William Barvosa-Carter**, Ventura, CA (US); **Christopher P. Henry**, Newbury Park, CA (US); **Guillermo A. Herrera**, Winnetka, CA (US); **Geoffrey P. Mc Knight**, Los Angeles, CA (US); **Alan L. Browne**, Grosse Pointe, MI (US); **Nancy L. Johnson**, Northville, MI (US)

Correspondence Address:
KATHRYN A MARRA
General Motors Corporation
Mail Code 482-C23-B21
P.O. Box 300
Detroit, MI 48265-3000 (US)

(21) Appl. No.: **11/074,575**

(22) Filed: **Mar. 8, 2005**

Related U.S. Application Data

(60) Provisional application No. 60/552,781, filed on Mar. 12, 2004.

Publication Classification

(51) **Int. Cl.**[7] **F16J 15/02**

(52) **U.S. Cl.** **277/628**

(57) **ABSTRACT**
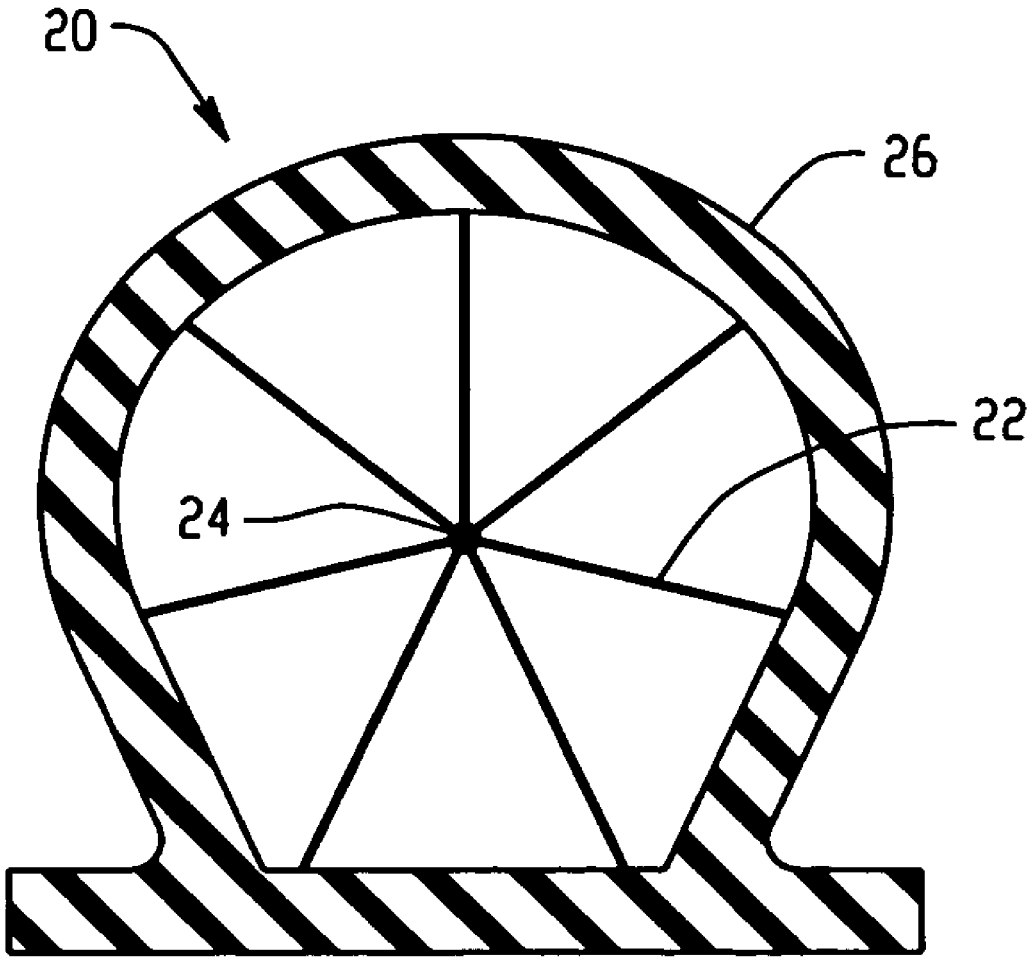
Active seal assemblies employing active materials that can be controlled and remotely changed to alter the seal effectiveness, wherein the active seal assemblies actively change modulus properties such as stiffness, shape orientation, and the like. In this manner, in seal applications such as a vehicle door application, door opening and closing efforts can be minimized yet seal effectiveness can be maximized.