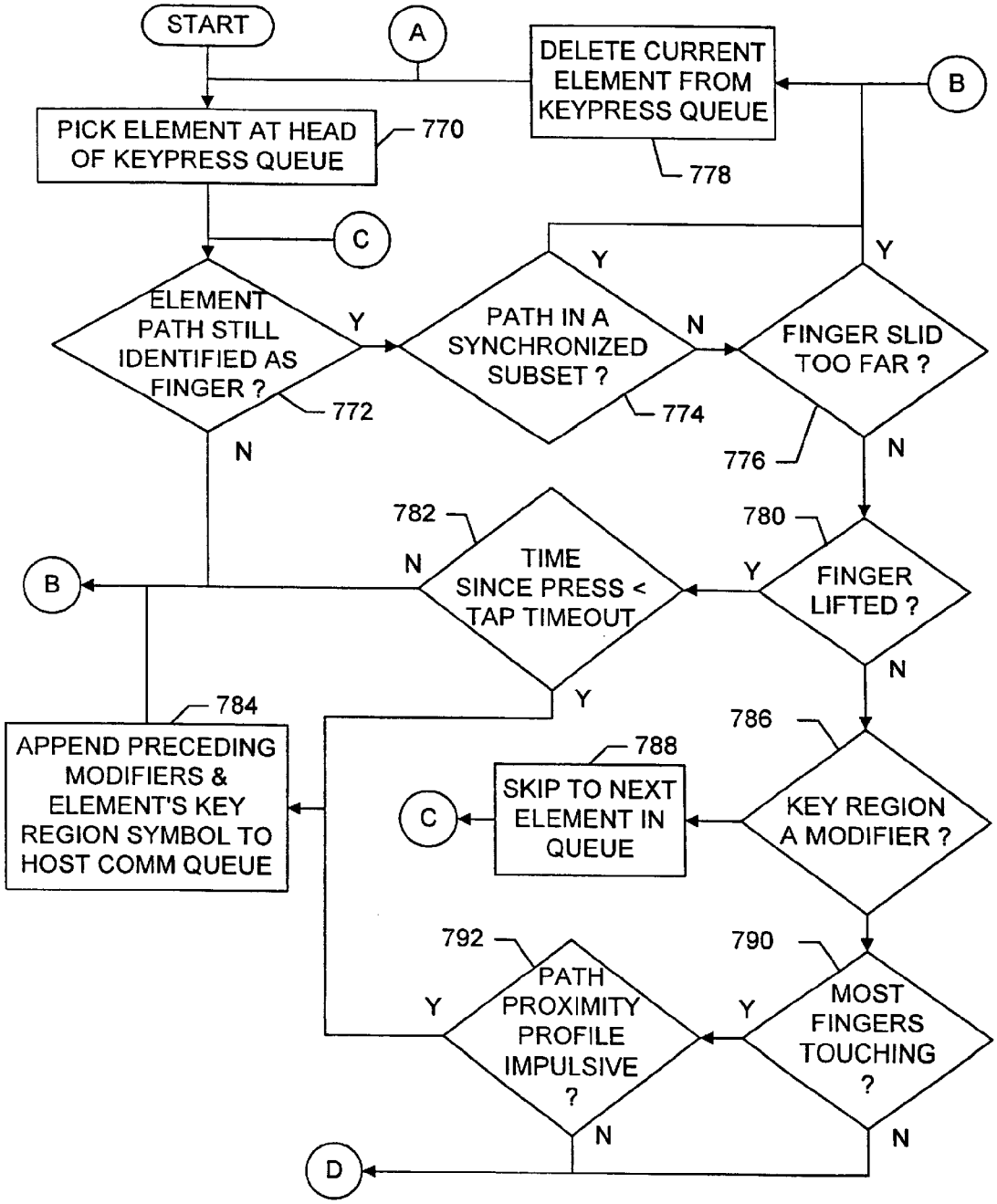
START
A
DELETE CURRENT ELEMENT FROM KEYPRESS QUEUE
B
PICK ELEMENT AT HEAD OF KEYPRESS QUEUE
770
778
C
ELEMENT PATH STILL IDENTIFIED AS FINGER ?
Y
N
772
PATH IN A SYNCHRONIZED SUBSET ?
Y
N
774
FINGER SLID TOO FAR ?
Y
N
776
780
FINGER LIFTED ?
Y
N
782
TIME SINCE PRESS < TAP TIMEOUT
N
Y
B
784
APPEND PRECEDING MODIFIERS & ELEMENT'S KEY REGION SYMBOL TO HOST COMM QUEUE
786
KEY REGION A MODIFIER ?
788
SKIP TO NEXT ELEMENT IN QUEUE
C
790
MOST FINGERS TOUCHING ?
Y
N
792
PATH PROXIMITY PROFILE IMPULSIVE ?
Y
N
D

FIG. 43A