FIG. 3

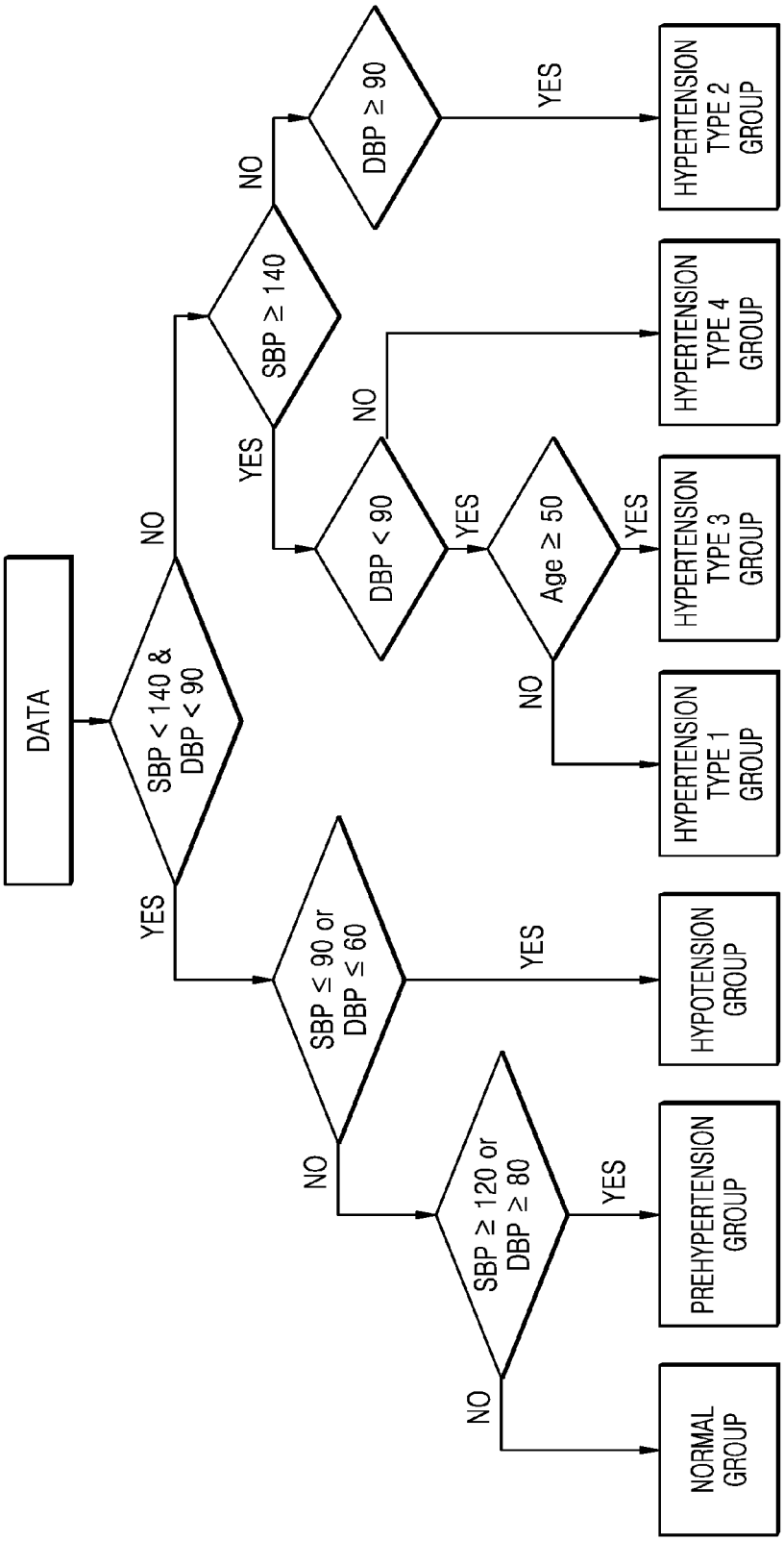
DATA
SBP < 140 & DBP < 90
YES
NO
SBP ≥ 140
YES
NO
DBP < 90
YES
NO
Age ≥ 50
YES
NO
DBP ≥ 90
YES
HYPERTENSION TYPE 1 GROUP
HYPERTENSION TYPE 3 GROUP
HYPERTENSION TYPE 4 GROUP
HYPERTENSION TYPE 2 GROUP
SBP ≤ 90 or DBP ≤ 60
YES
NO
HYPOTENSION GROUP
SBP ≥ 120 or DBP ≥ 80
YES
NO
PREHYPERTENSION GROUP
NORMAL GROUP