FIG. 8

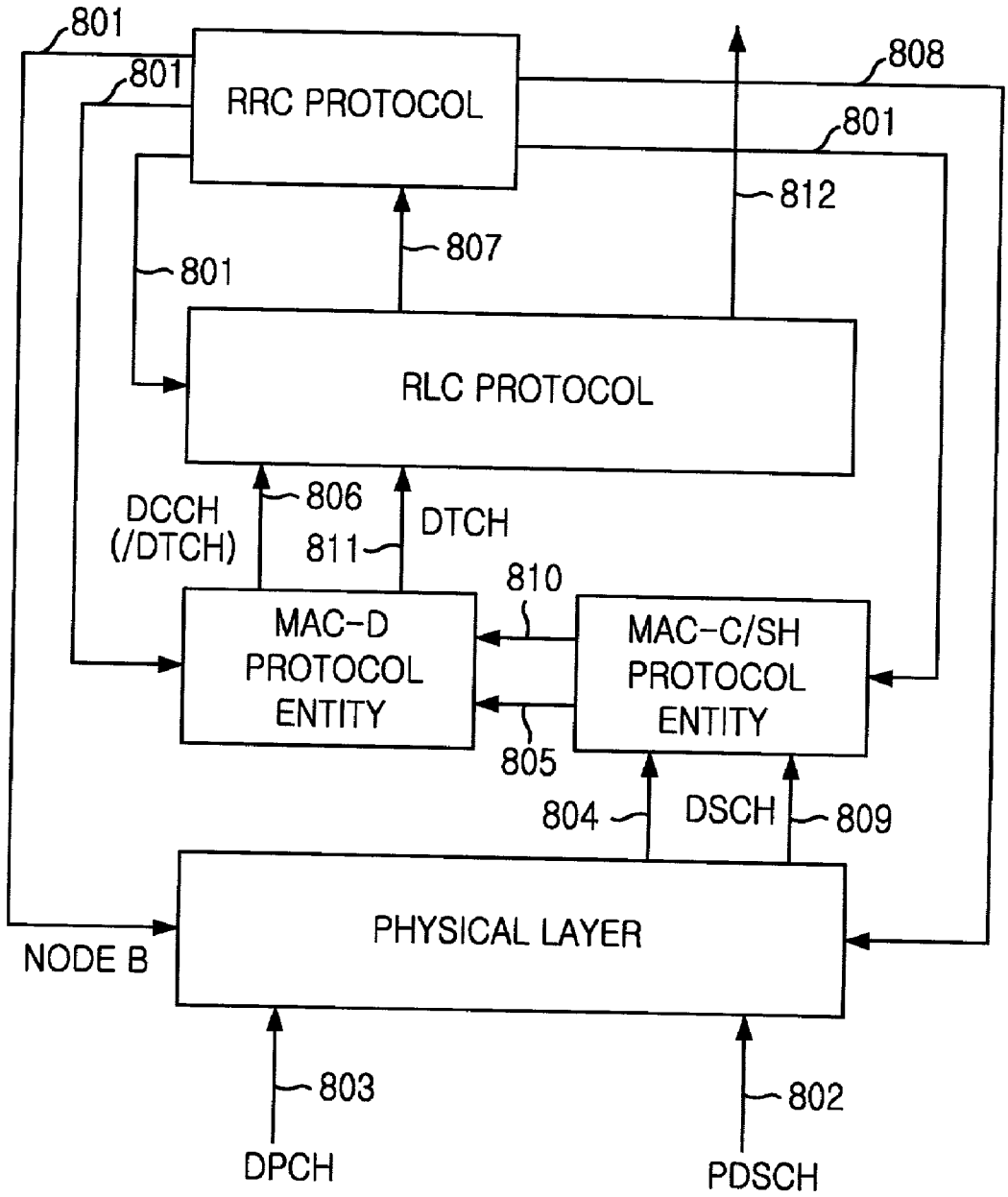
801
801
RRC PROTOCOL
808
801
812
807
801
RLC PROTOCOL
DCCH
(/DTCH)
806
811
DTCH
810
MAC-D
PROTOCOL
ENTITY
MAC-C/SH
PROTOCOL
ENTITY
805
804
DSCH
809
PHYSICAL LAYER
NODE B
803
802
DPCH
PDSCH