FIG. 4

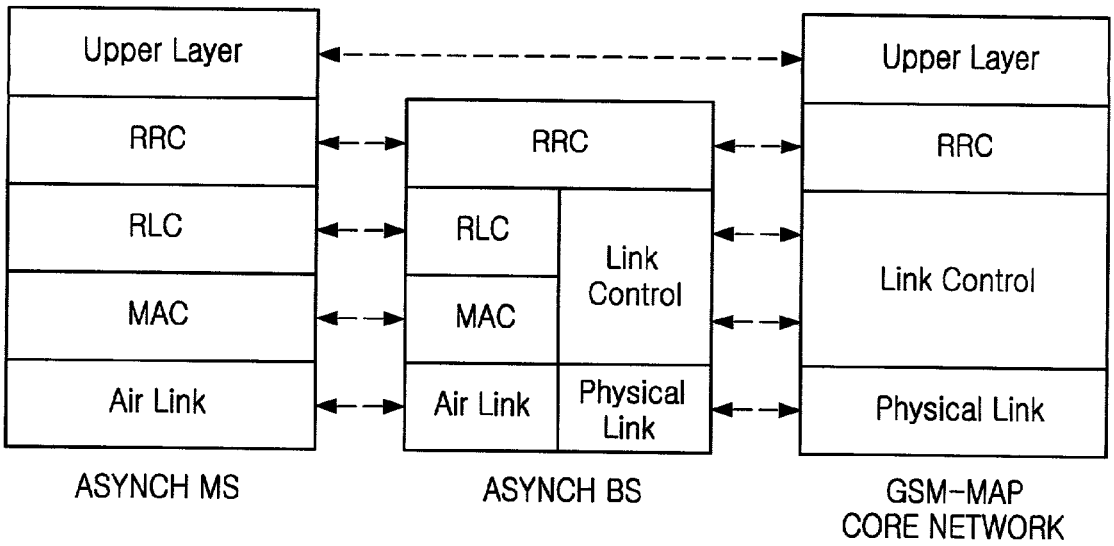
Upper Layer
RRC
RLC
MAC
Air Link
ASYNCH MS
RRC
RLC
MAC
Link Control
Air Link
Physical Link
ASYNCH BS
Upper Layer
RRC
Link Control
Physical Link
GSM-MAP CORE NETWORK