FIG. 5A

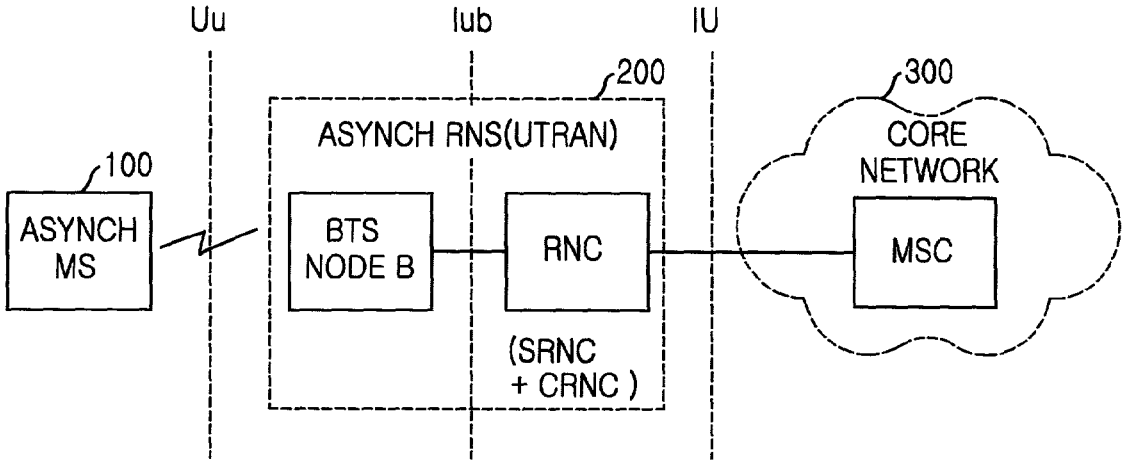
Uu
Iub
IU
200
300
ASYNCH RNS(UTRAN)
CORE
NETWORK
100
ASYNCH
MS
BTS
NODE B
RNC
MSC
(SRNC
+ CRNC)