FIG. 5B

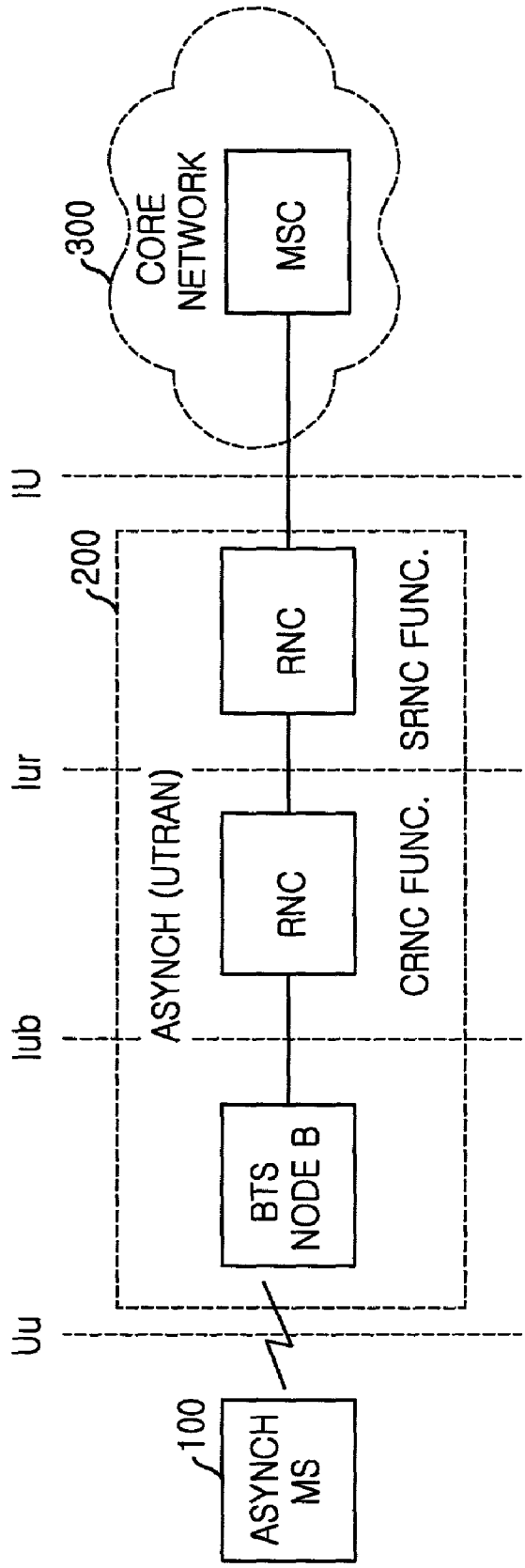
300
CORE NETWORK
MSC
IU
200
RNC
SRNC FUNC.
Iur
ASYNCH (UTRAN)
RNC
CRNC FUNC.
Iub
BTS NODE B
Uu
100
ASYNCH MS