FIG. 7

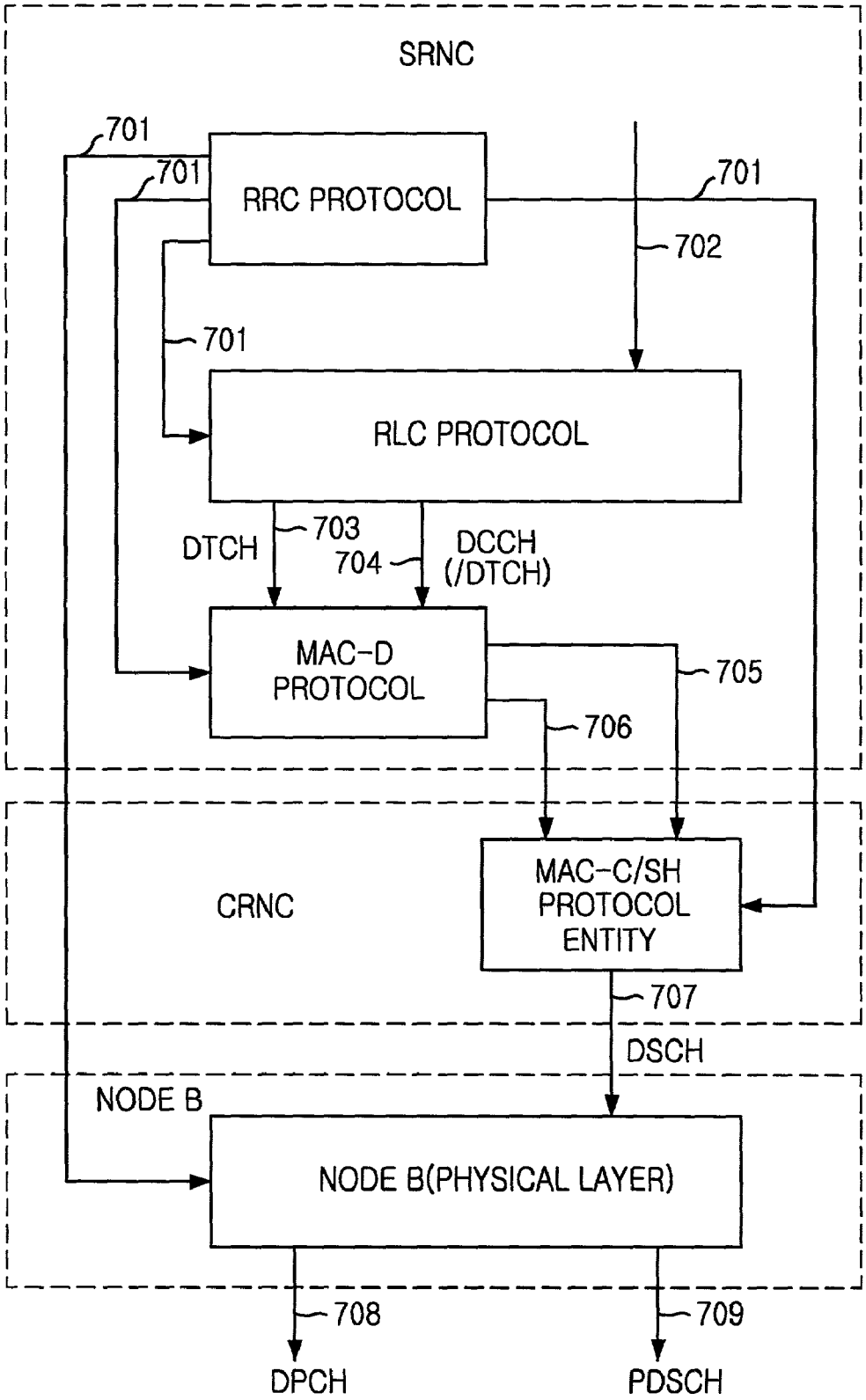
SRNC
701
701
RRC PROTOCOL
701
702
701
RLC PROTOCOL
DTCH
703
704
DCCH
(/DTCH)
MAC-D
PROTOCOL
705
706
CRNC
MAC-C/SH
PROTOCOL
ENTITY
707
DSCH
NODE B
NODE B(PHYSICAL LAYER)
708
709
DPCH
PDSCH