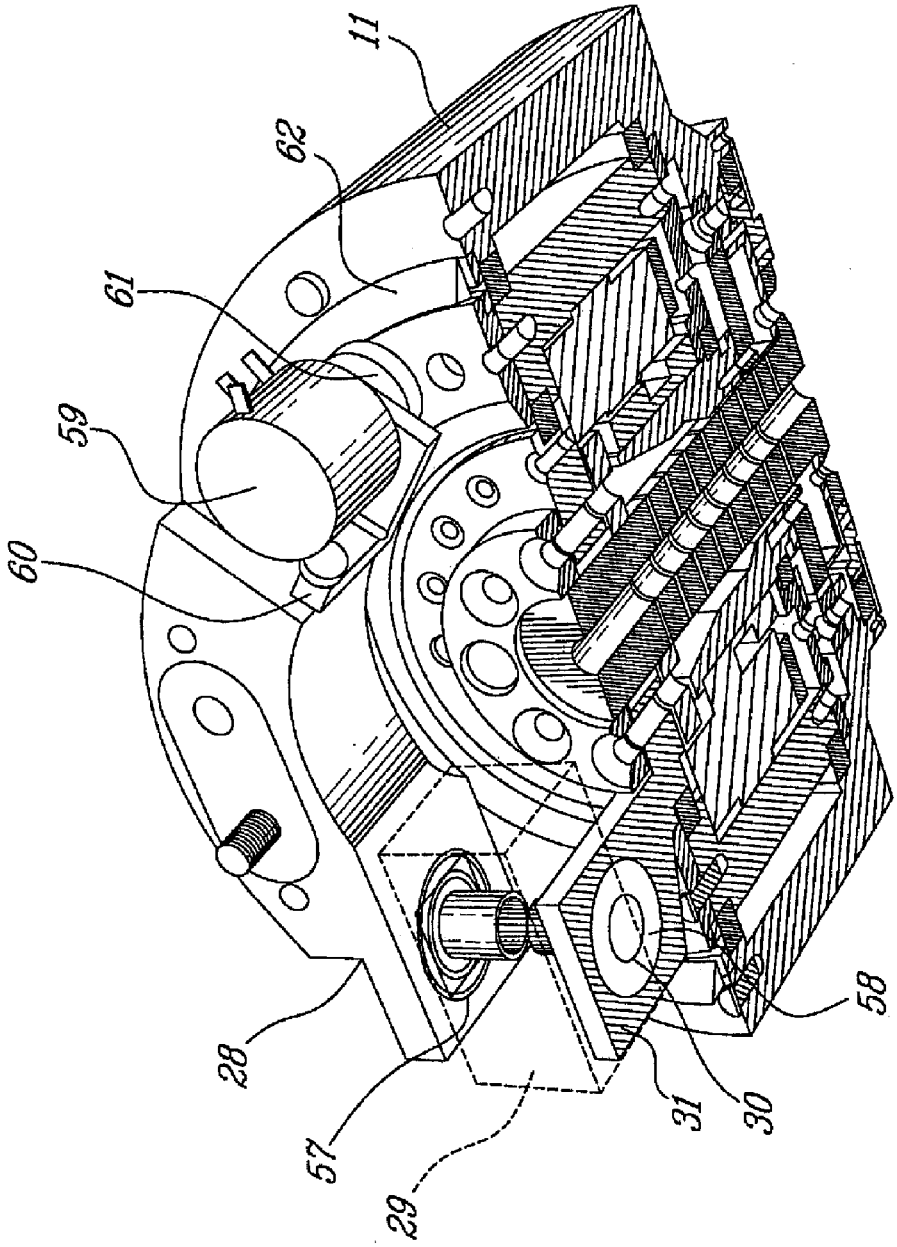

Fig-19