US 20150009896A1

(19) United States

(12) Patent Application Publication

(10) Pub. No.: US 2015/0009896 A1

(43) Pub. Date: Jan. 8, 2015

Puhakka

(54) SESSION TERMINATION IN A MOBILE PACKET CORE NETWORK

(75) Inventor: **Antti Juho Puhakka**, Lohja (FI)

(73) Assignee: **NOKIA SOLUTIONS AND NETWORKS OY**, Espoo (FI)

(21) Appl. No.: **14/374,592**

(22) PCT Filed: **Jan. 27, 2012**

(86) PCT No.: **PCT/EP2012/051308**

§ 371 (c)(1), (2), (4) Date: **Jul. 25, 2014**

Publication Classification

(51) **Int. Cl.**

H04W 76/06 (2006.01)

H04L 12/933 (2006.01)

(52) **U.S. Cl.**

CPC *H04W 76/06* (2013.01); *H04L 49/15* (2013.01)

USPC **370/328**

(57) **ABSTRACT**
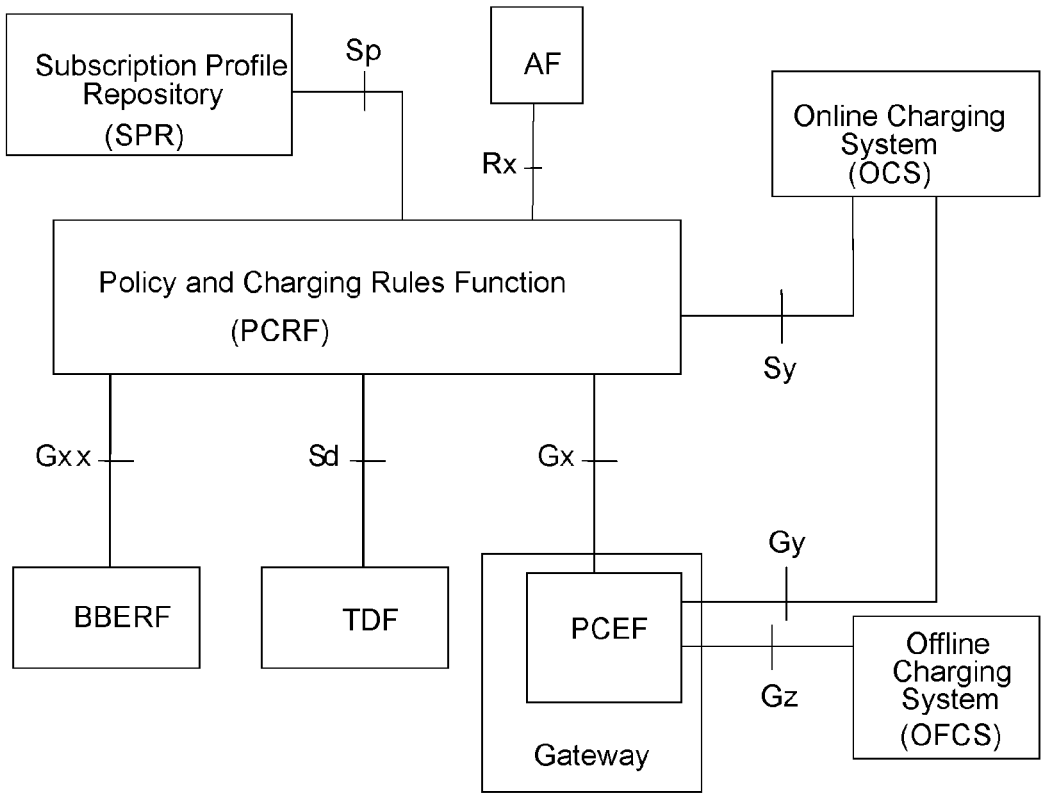
A gateway device of a mobile packet core network matches (S**31**) data packets flowing to/from the mobile packet core network, using a filter, and terminates (S**33**) a session in accordance with an action for the filter when a data packet of the session, which flows to/from the mobile packet core network, matches the filter (S**32**).