FIG. 2

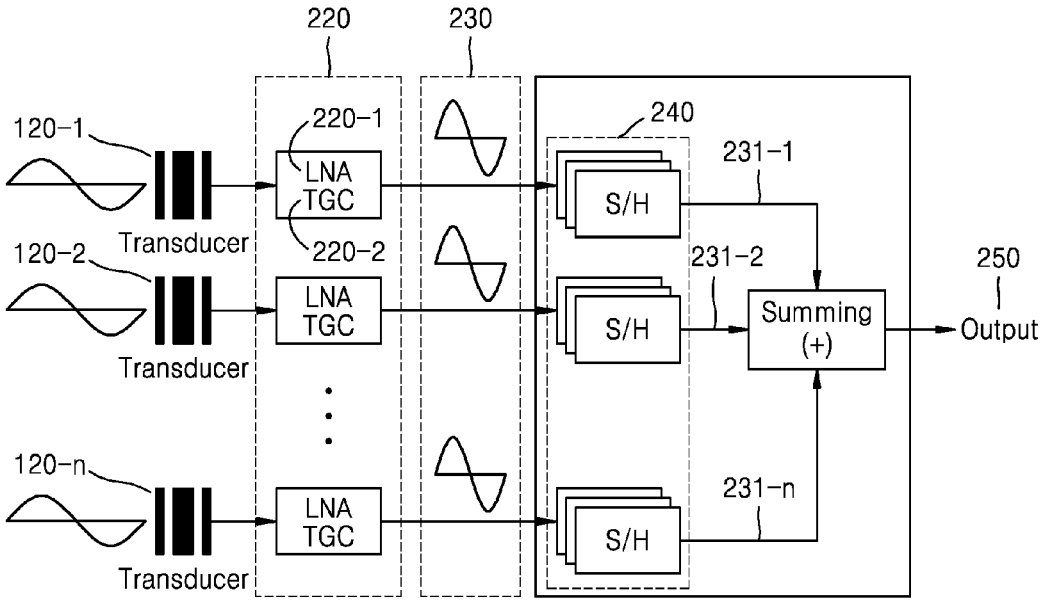
220
230
240
120-1
220-1
LNA
TGC
220-2
Transducer
120-2
LNA
TGC
Transducer
120-n
LNA
TGC
Transducer
S/H
S/H
S/H
231-1
231-2
231-n
Summing
(+)
250
Output