FIG. 19

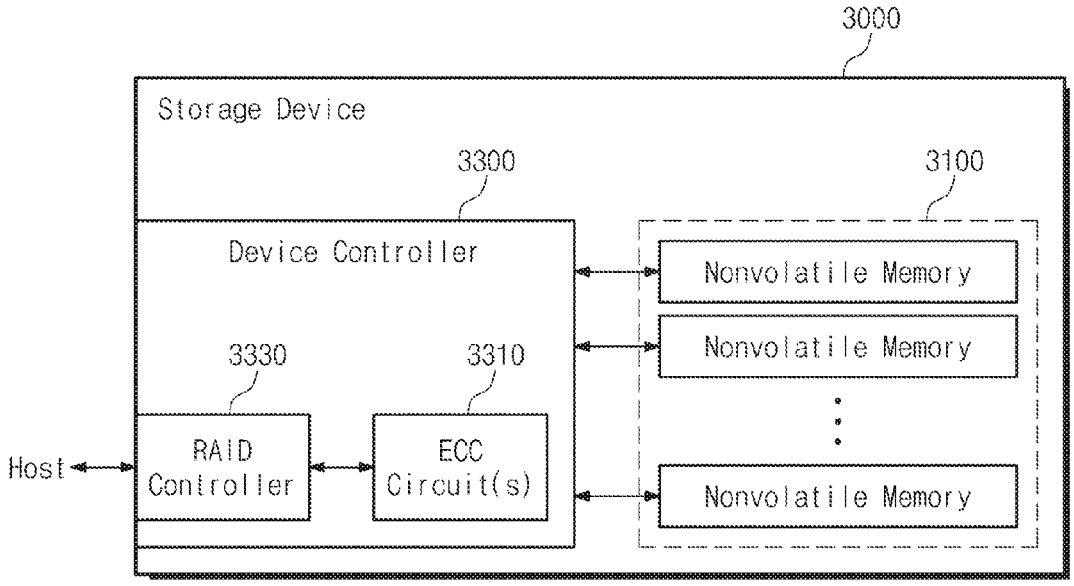
3000
Storage Device
3300
3100
Device Controller
Nonvolatile Memory
Nonvolatile Memory
3330
3310
Host
RAID Controller
ECC Circuit(s)
Nonvolatile Memory