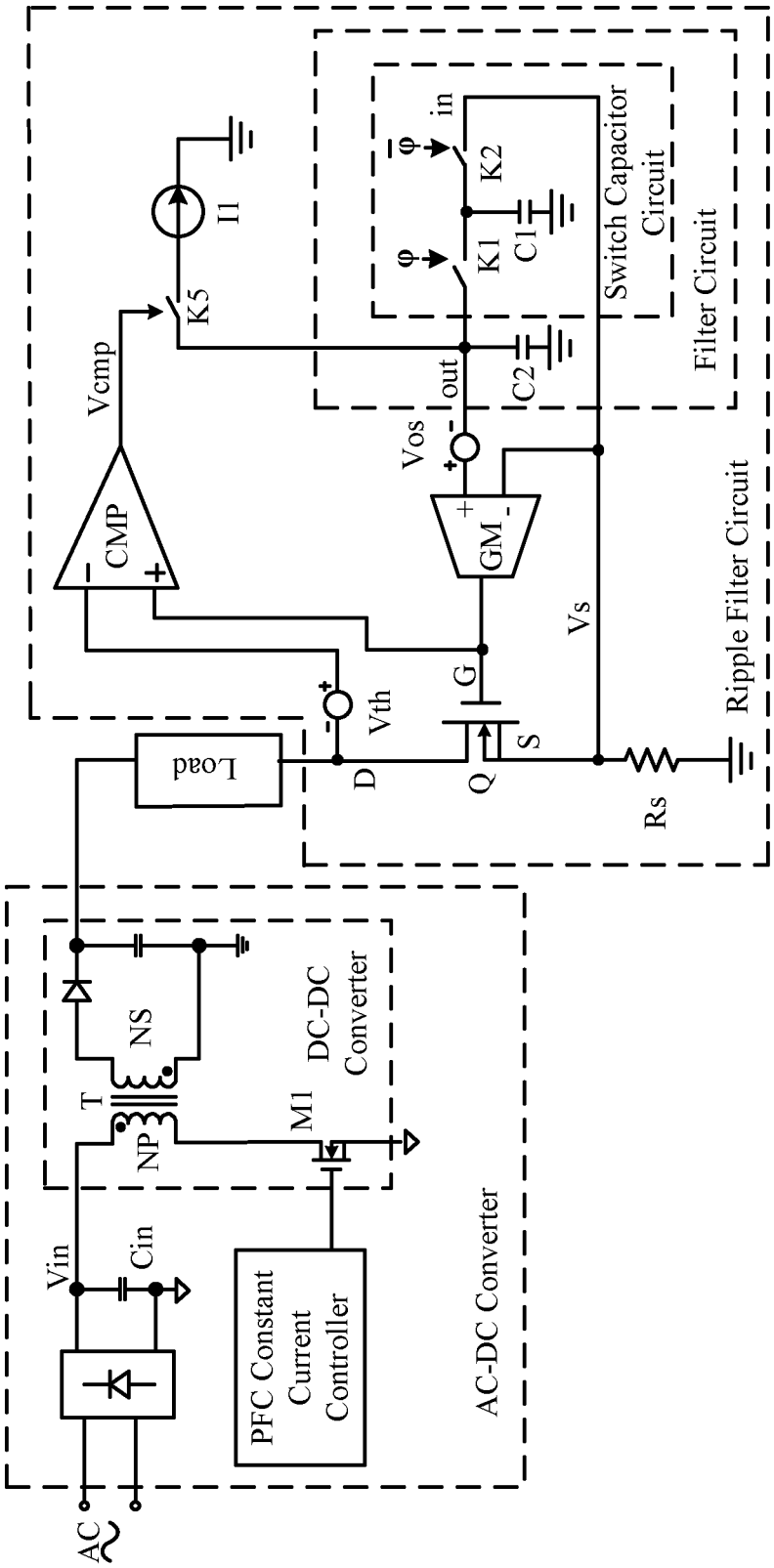
AC
Vin
Cin
PFC Constant Current Controller
AC-DC Converter
NP
T
NS
M1
DC-DC Converter
Load
D
Vth
Q
S
G
Rs
Vs
GM
Vos
out
CMP
Vcmp
K5
I1
C2
K1
C1
K2
φ
in
Switch Capacitor Circuit
Filter Circuit
Ripple Filter Circuit

FIG. 6