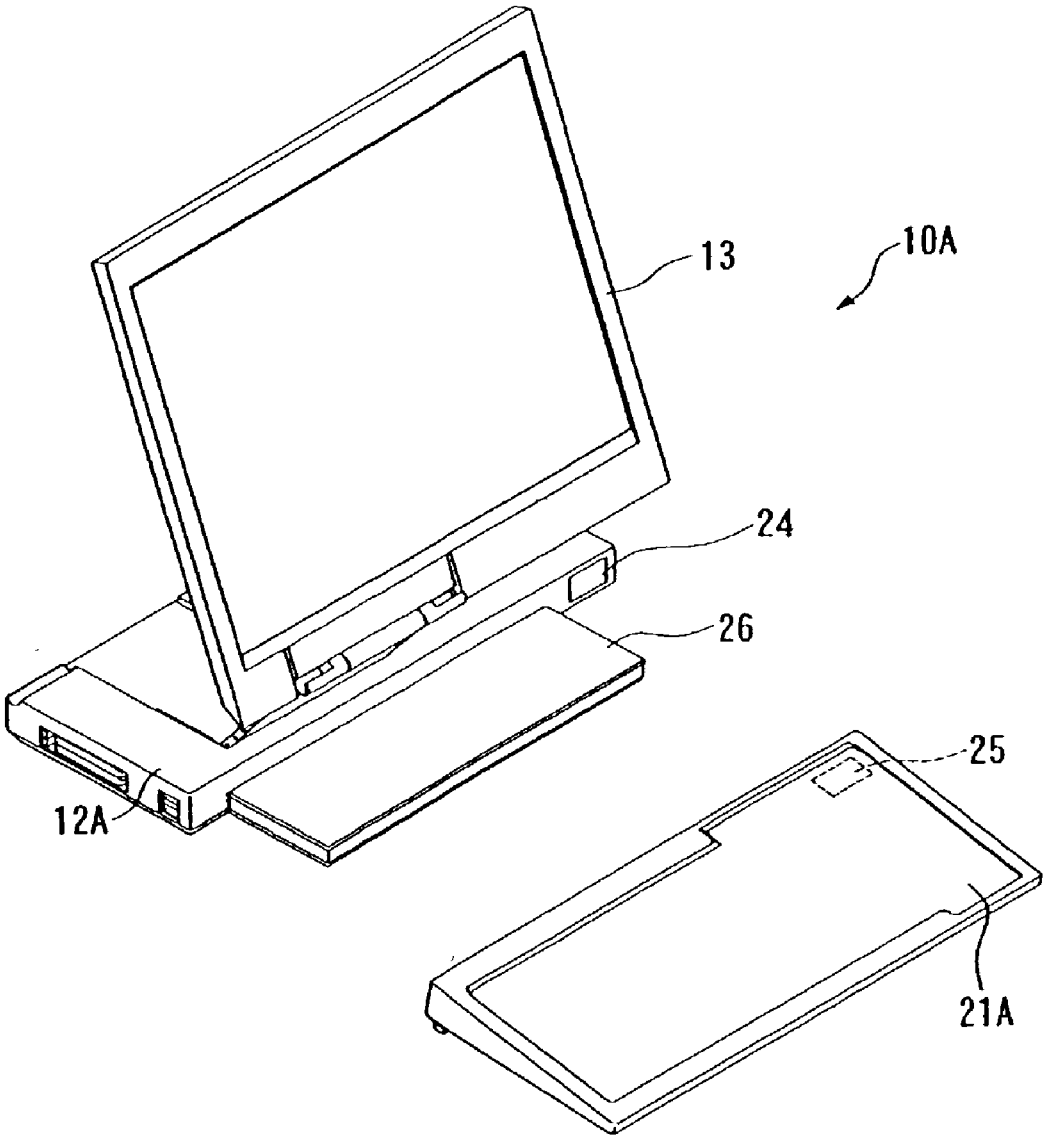[Figure 9]