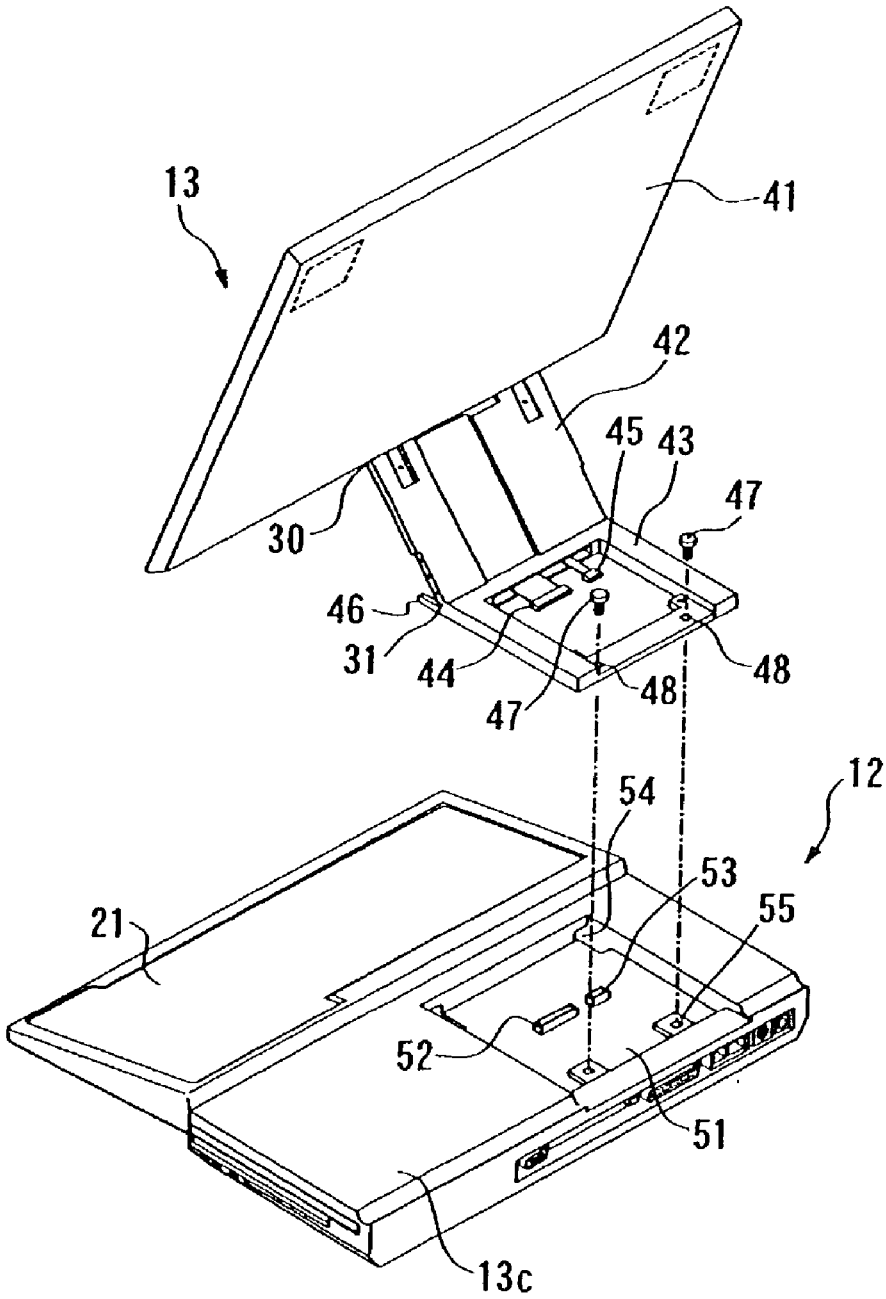[Figure 2]