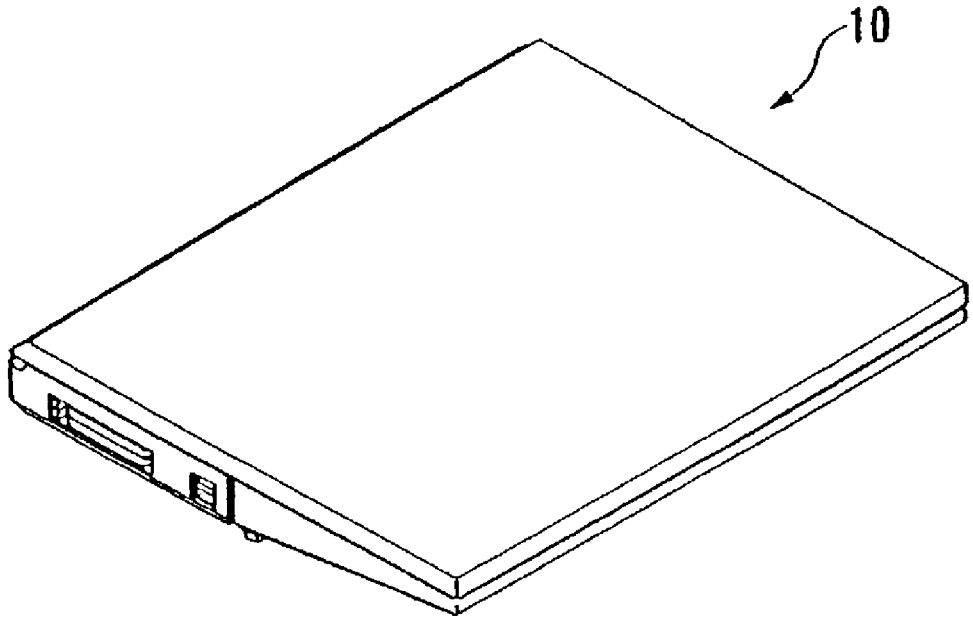[Figure 6]