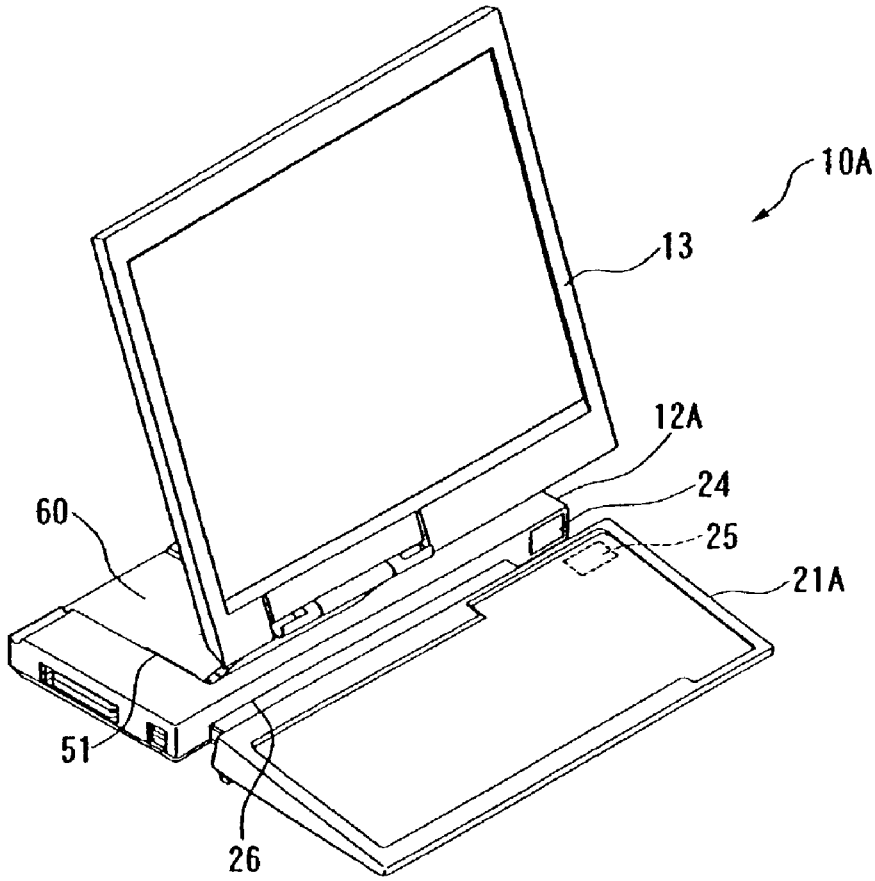[Figure 8]