FIG. 18

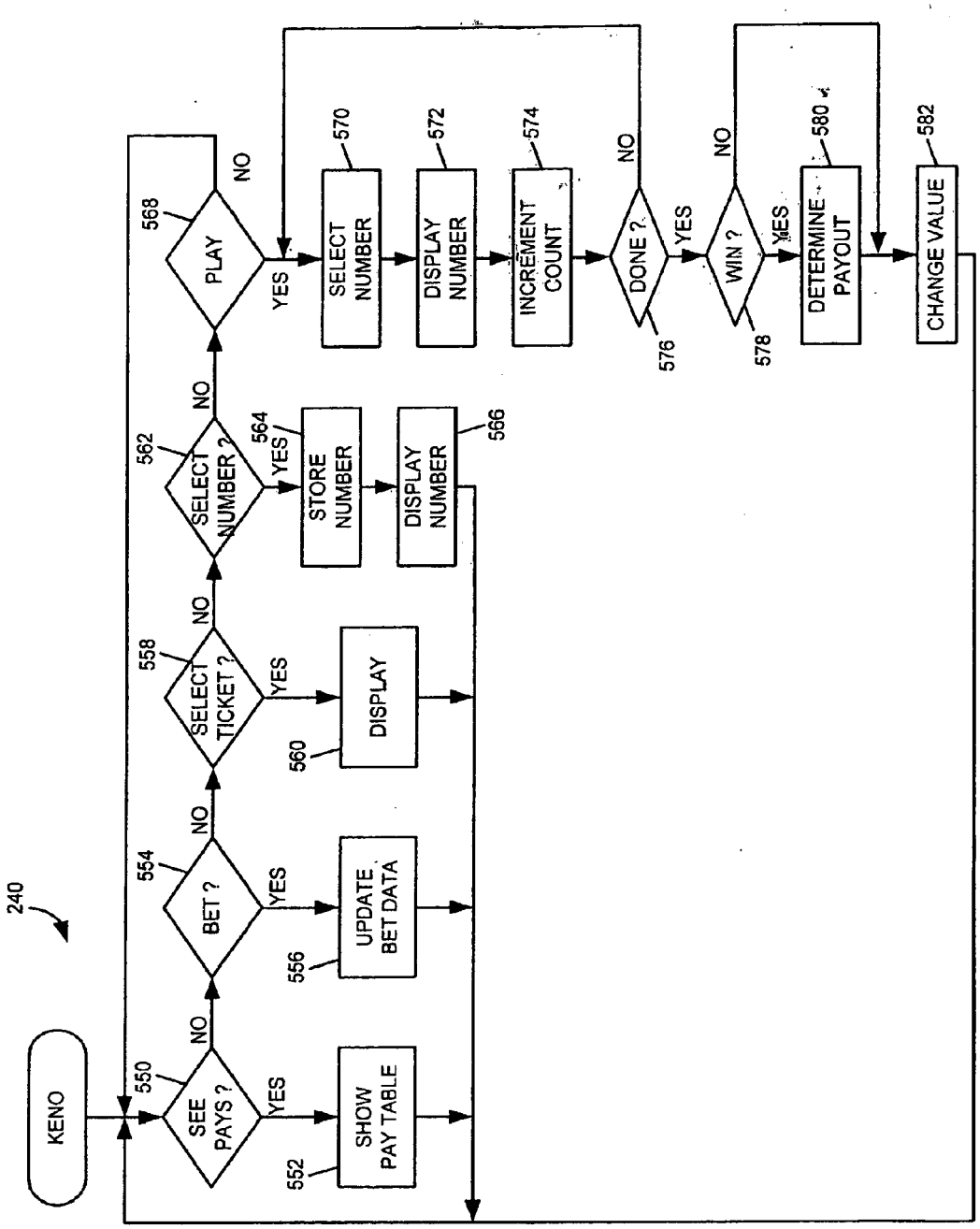
240
KENO
550
SEE PAYS ?
YES
NO
552
SHOW PAY TABLE
554
BET ?
YES
NO
556
UPDATE BET DATA
558
SELECT TICKET ?
YES
NO
560
DISPLAY
562
SELECT NUMBER ?
YES
NO
564
STORE NUMBER
566
DISPLAY NUMBER
568
PLAY
YES
NO
570
SELECT NUMBER
572
DISPLAY NUMBER
574
INCREMENT COUNT
576
DONE ?
YES
NO
578
WIN ?
YES
NO
580
DETERMINE PAYOUT
582
CHANGE VALUE