FIG. 1

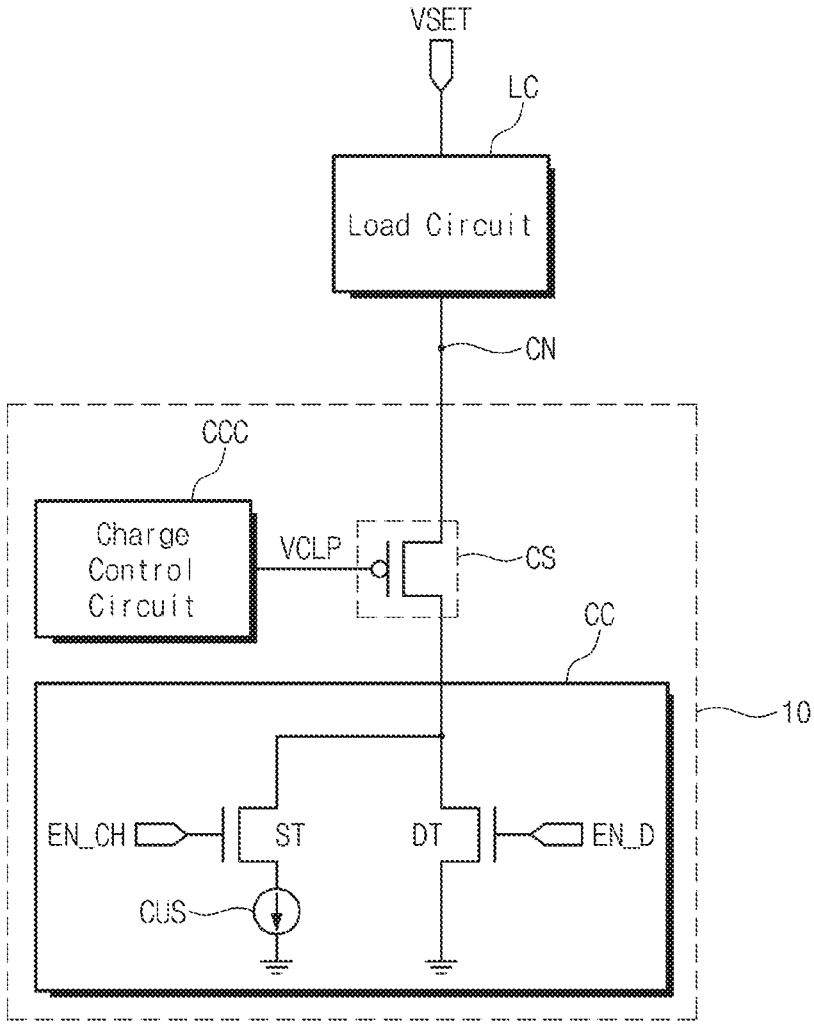
VSET
LC
Load Circuit
CN
CCC
Charge Control Circuit
VCLP
CS
CC
10
EN_CH
ST
DT
EN_D
CUS