US 20040173398A1

(19) United States

(12) Patent Application Publication

(10) Pub. No.: US 2004/0173398 A1

(43) Pub. Date: Sep. 9, 2004

Sakai et al.

(54) OCCUPANT DETERMINATION DEVICE

(75) Inventors: **Morio Sakai**, Toyota-shi (JP); **Masaki Mori**, Kariya-shi (JP); **Kazunori Sakamoto**, Chiryu-shi (JP); **Minoru Izawa**, Okazaki-shi (JP); **Yasunori Hasegawa**, Kasugai-shi (JP)

Correspondence Address:
BURNS DOANE SWECKER & MATHIS L L P
POST OFFICE BOX 1404
ALEXANDRIA, VA 22313-1404 (US)

(73) Assignee: **AISIN SEIKI KABUSHIKI KAISHA**

(21) Appl. No.: **10/724,048**

(22) Filed: **Dec. 1, 2003**

(30) **Foreign Application Priority Data**

Nov. 29, 2002 (JP) 2002-348377

Publication Classification

(51) **Int. Cl.**[7] **B60T 7/14**

(52) **U.S. Cl.** **180/273**; 701/45

(57) **ABSTRACT**
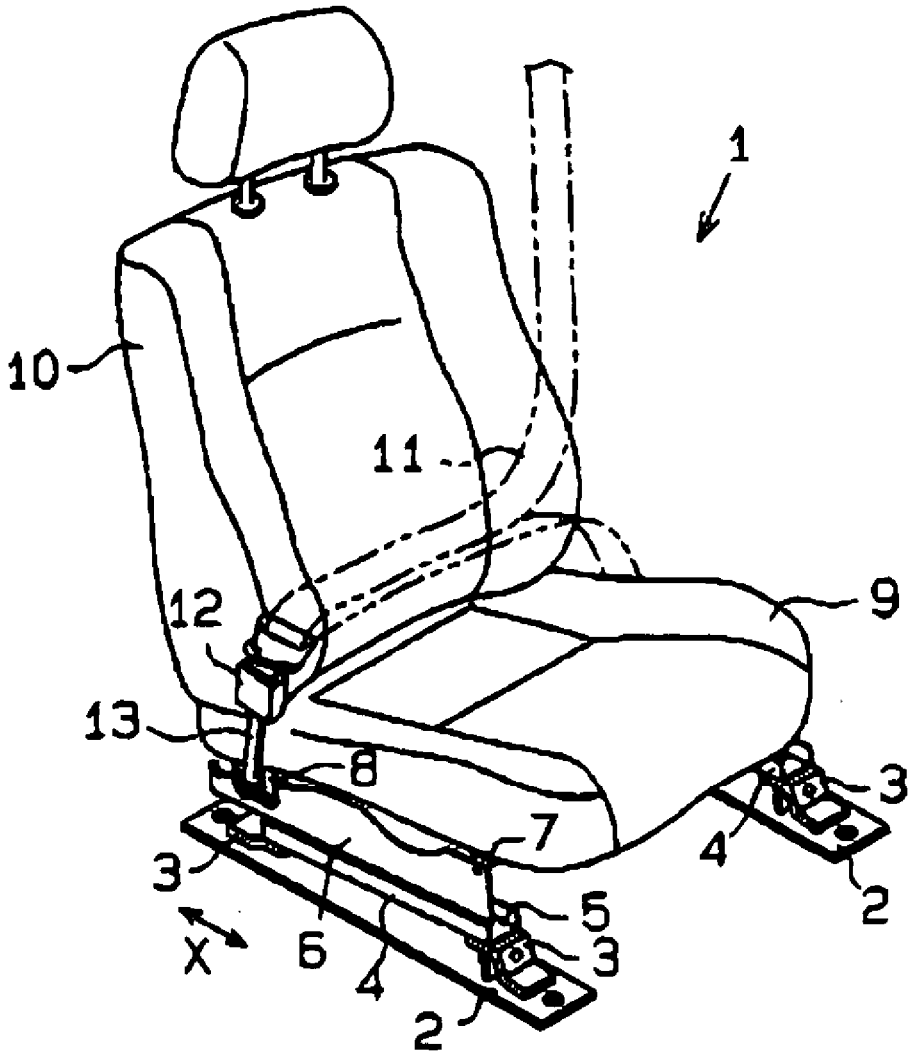
An occupant determination device for a vehicle seat includes a load sensor provided at a seat body, a controller for calculating a detection load value based on a load value output from the load sensor and for determining whether an occupant seated on the vehicle seat is adult or a child, wherein a hysteresis is provided for changing the occupant determination from either a child or an adult to an adult or a child.