FIG. 4

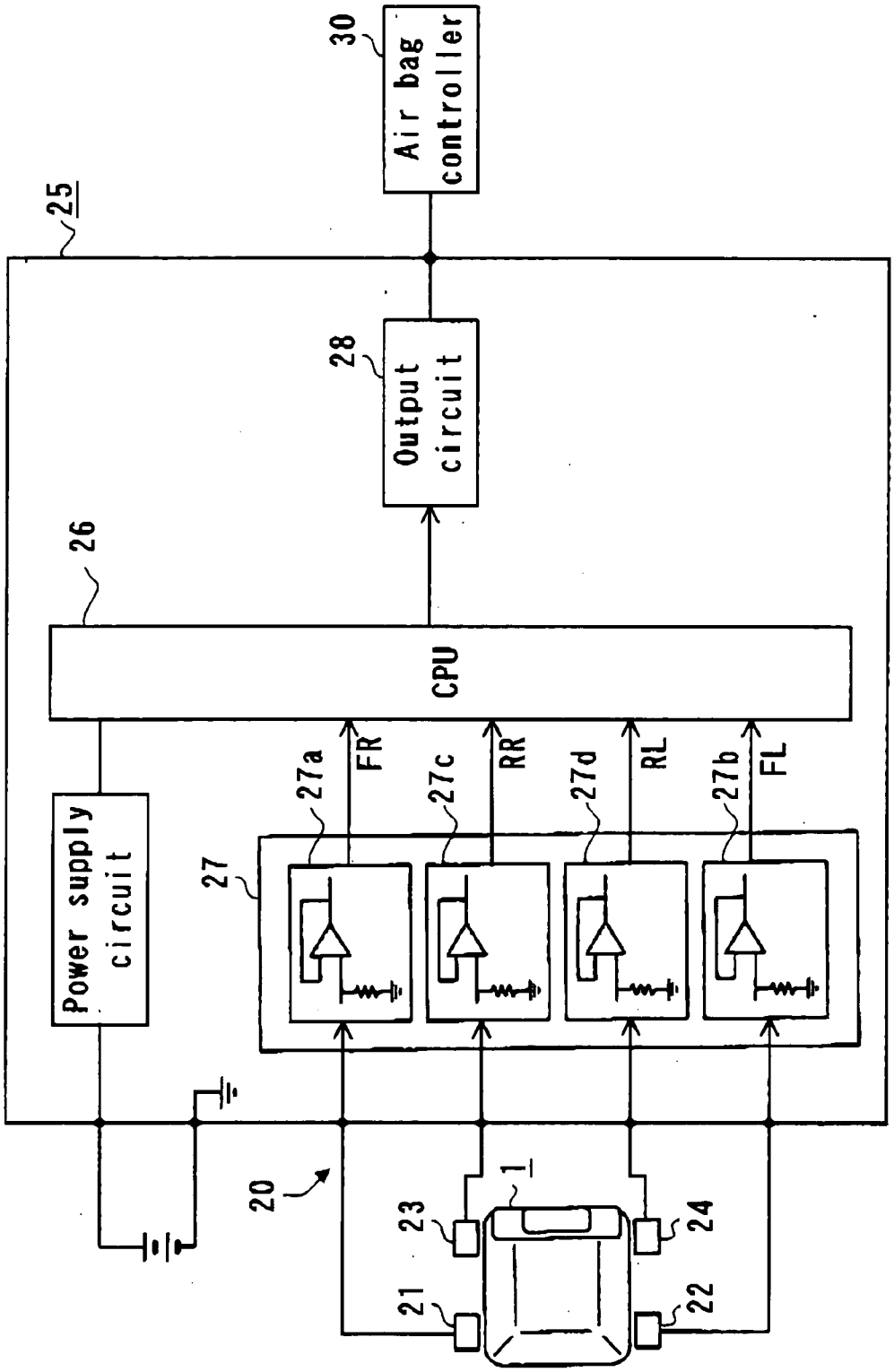
Air bag controller
30
25
Output circuit
28
26
CPU
Power supply circuit
27
27a
FR
27c
RR
27d
RL
27b
FL
20
1
23
24
21
22