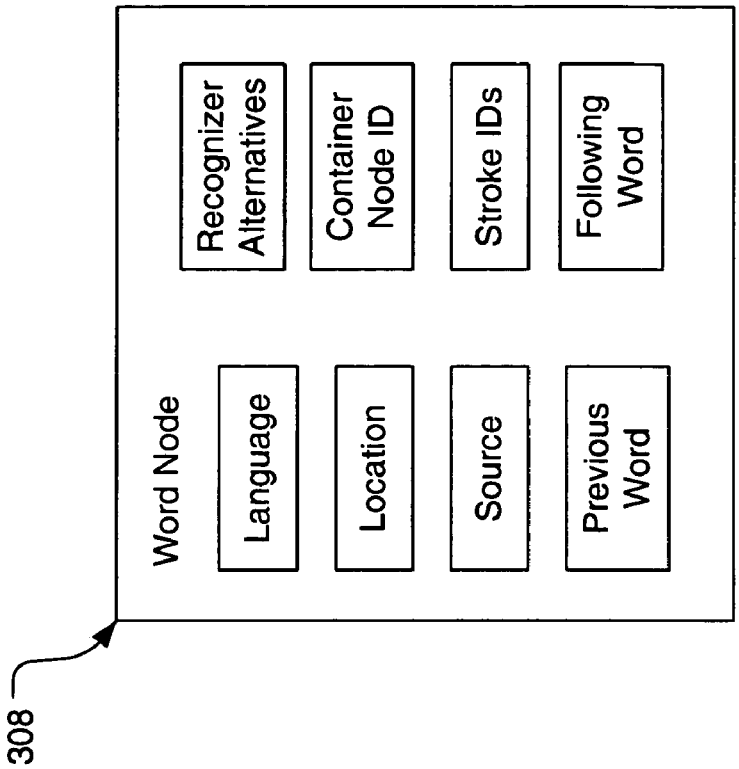
308
Word Node
Language
Location
Source
Previous Word
Recognizer Alternatives
Container Node ID
Stroke IDs
Following Word

FIG. 4

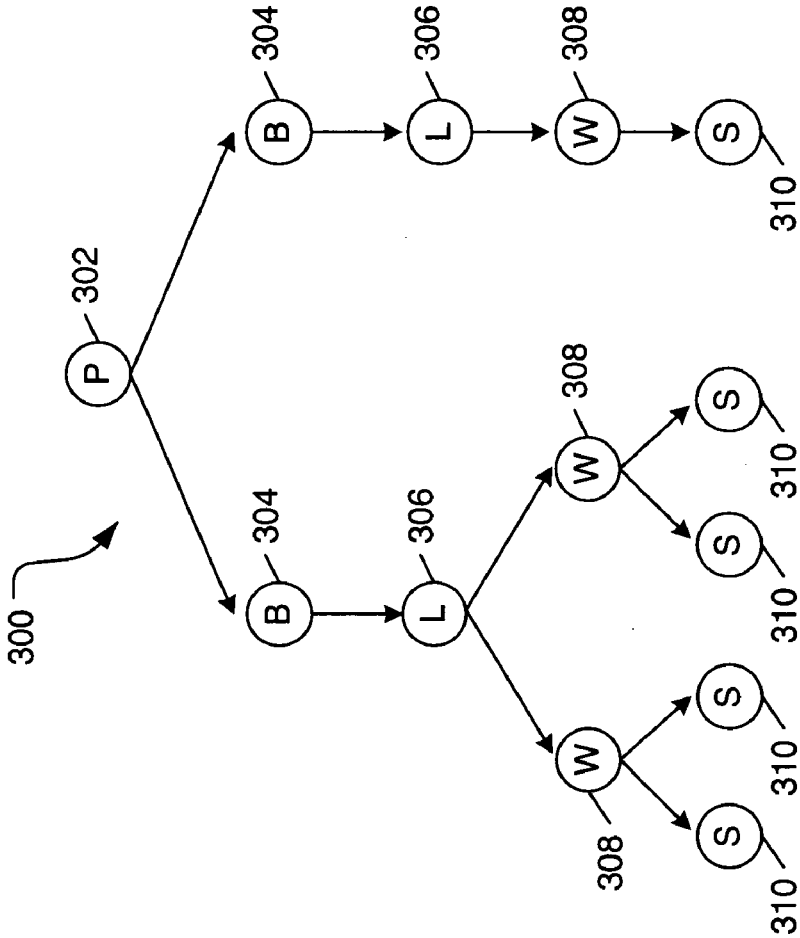
300
P
302
B
304
L
306
W
308
S
310

FIG. 3