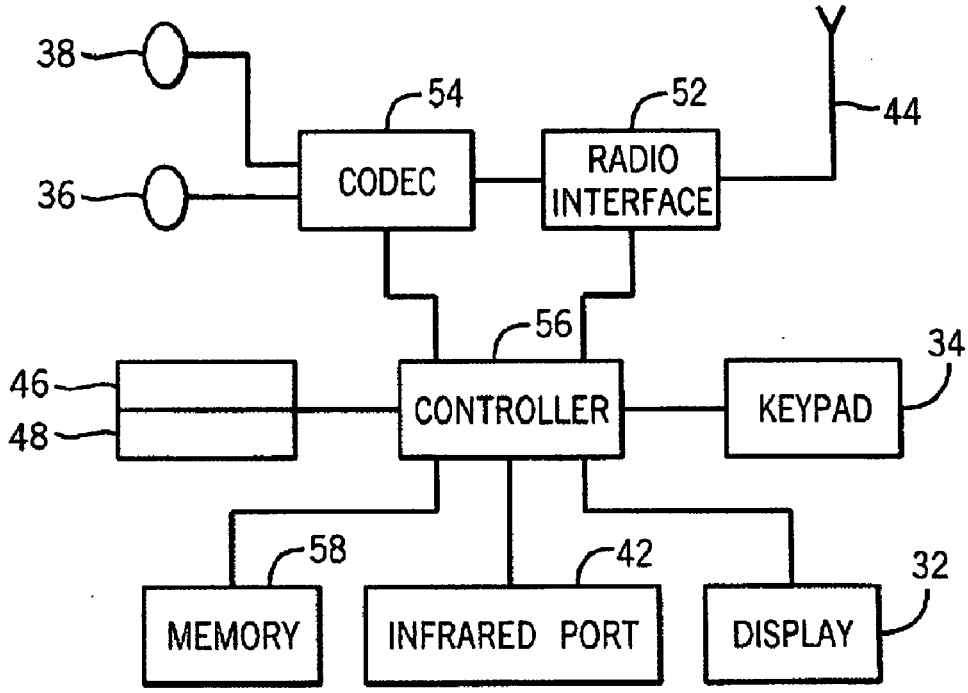
38
36
54
CODEC
52
RADIO INTERFACE
44
56
CONTROLLER
34
KEYPAD
46
48
58
MEMORY
42
INFRARED PORT
32
DISPLAY

Figure 16