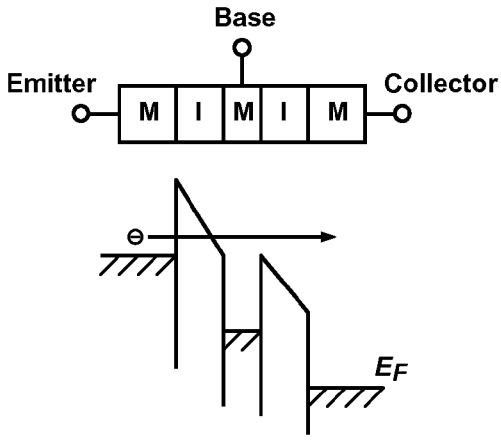

FIG. 1a (Prior Art)

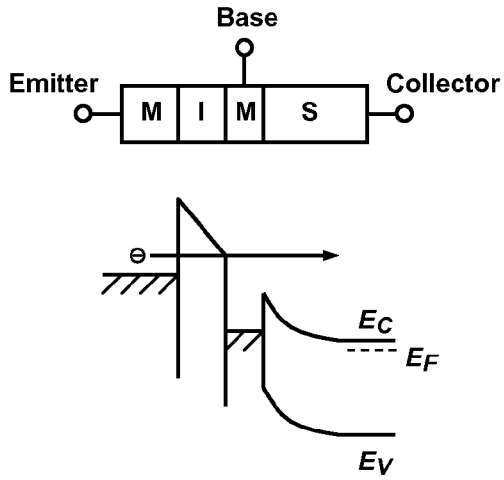

FIG. 1b (Prior Art)

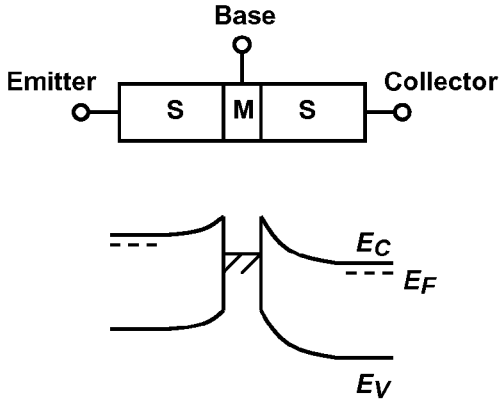

FIG. 1c (Prior Art)