FIG. 1

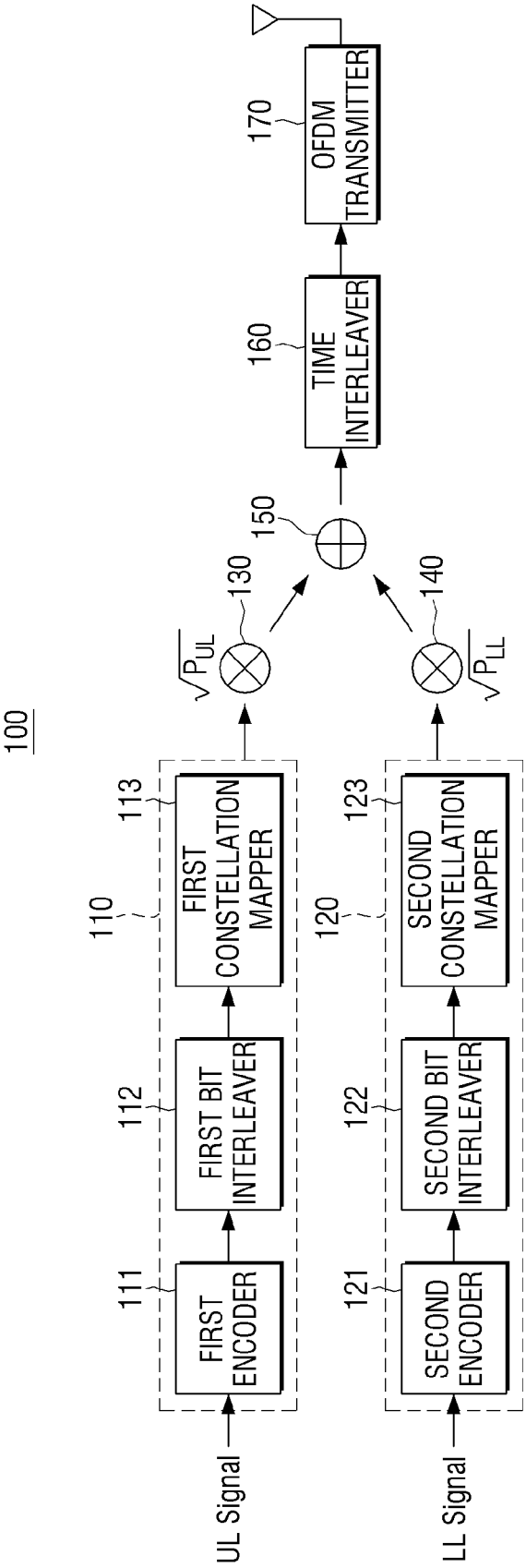
100
UL Signal
LL Signal
110
111
FIRST ENCODER
112
FIRST BIT INTERLEAVER
113
FIRST CONSTELLATION MAPPER
120
121
SECOND ENCODER
122
SECOND BIT INTERLEAVER
123
SECOND CONSTELLATION MAPPER
$\sqrt{P_{UL}}$
130
$\sqrt{P_{LL}}$
140
150
160
TIME INTERLEAVER
170
OFDM TRANSMITTER