FIG. 22

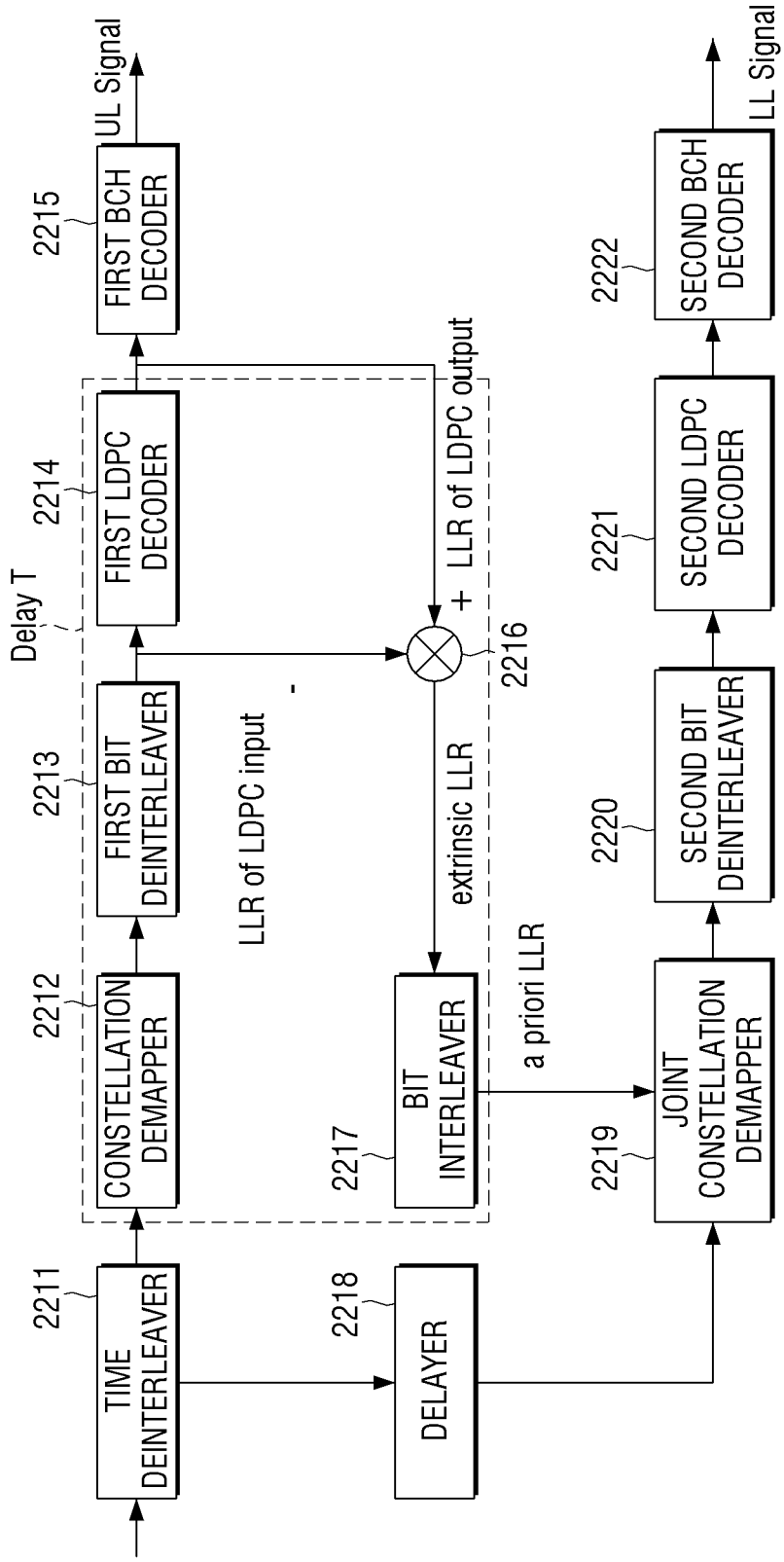
1000
2211
TIME DEINTERLEAVER
2212
CONSTELLATION DEMAPPER
2213
FIRST BIT DEINTERLEAVER
2214
FIRST LDPC DECODER
2215
FIRST BCH DECODER
UL Signal
Delay T
LLR of LDPC input
-
+
LLR of LDPC output
2216
extrinsic LLR
2217
BIT INTERLEAVER
2218
DELAYER
a priori LLR
2219
JOINT CONSTELLATION DEMAPPER
2220
SECOND BIT DEINTERLEAVER
2221
SECOND LDPC DECODER
2222
SECOND BCH DECODER
LL Signal