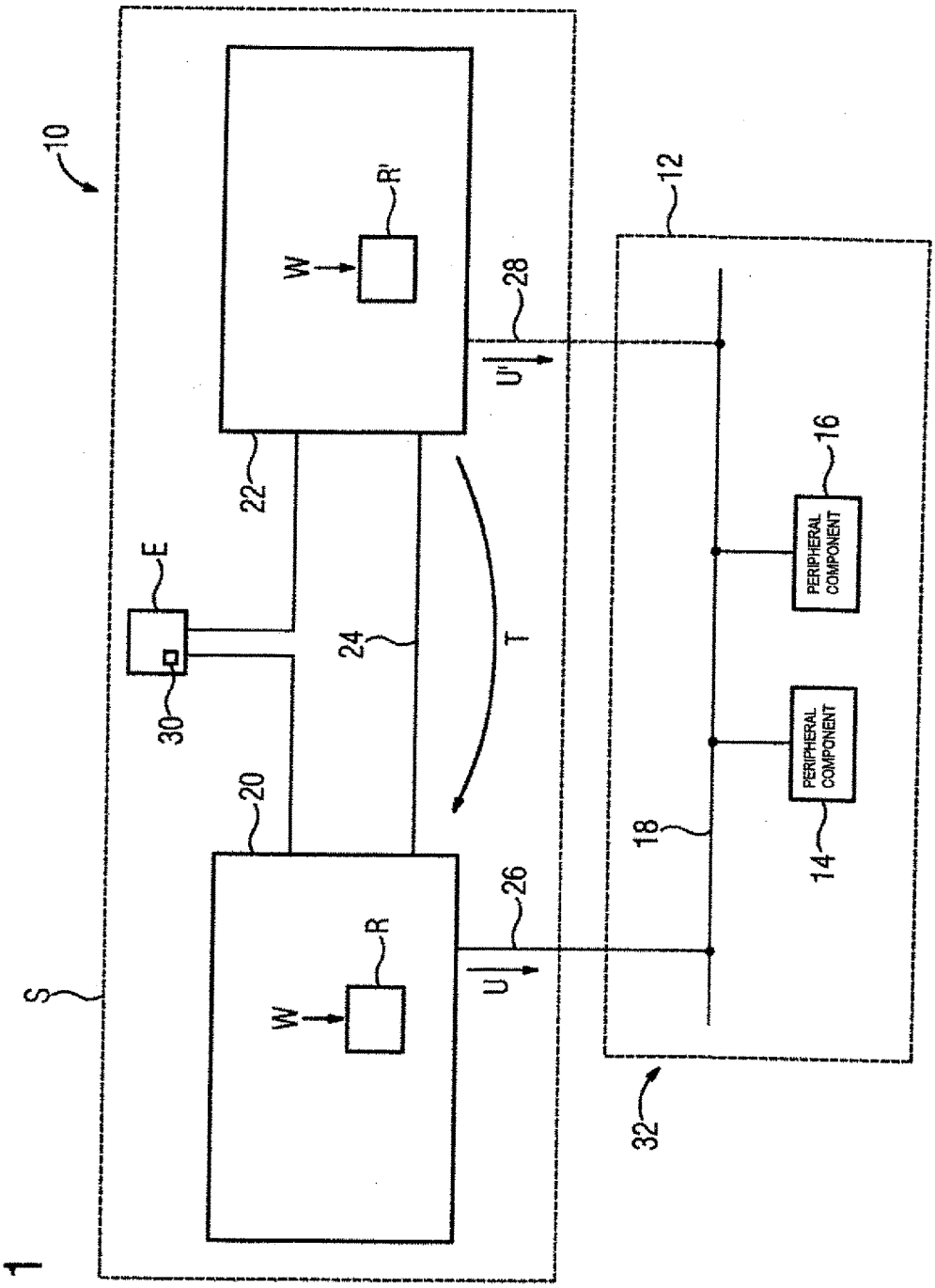
10
S
W
R'
W
R
E
20
22
24
26
28
30
T
U
U'
12
14
16
18
32
PERIPHERAL COMPONENT
PERIPHERAL COMPONENT

FIG 1