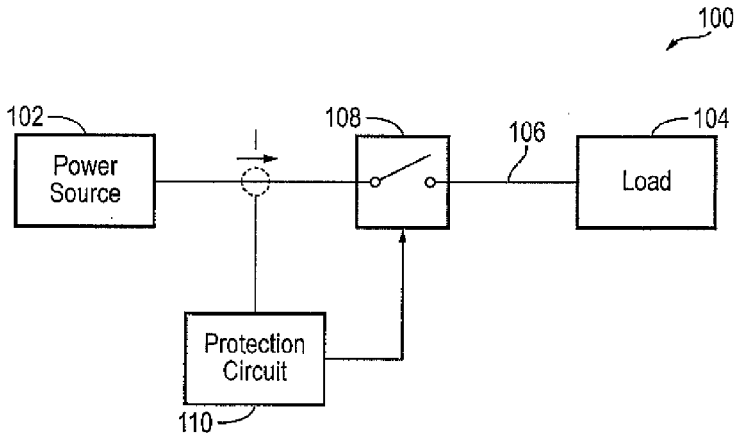
100
102
Power Source
I
108
106
104
Load
Protection Circuit
110

FIG. 2

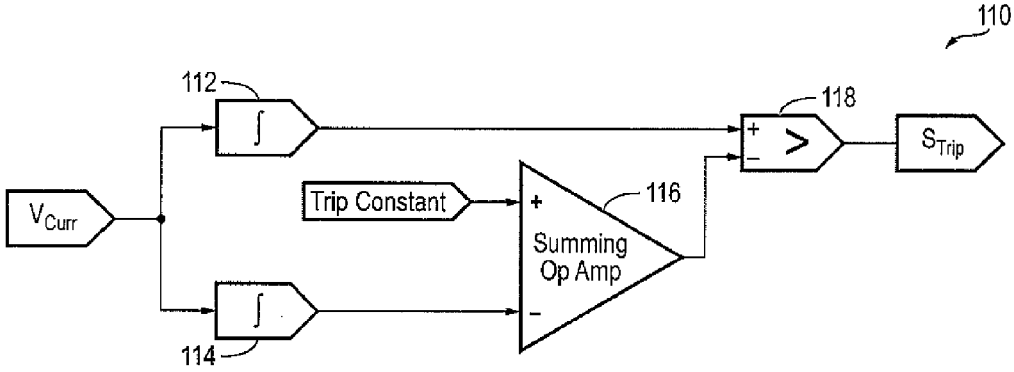
110
112
118
S_{Trip}
V_{Curr}
Trip Constant
116
Summing Op Amp
114

FIG. 3