FIG. 28

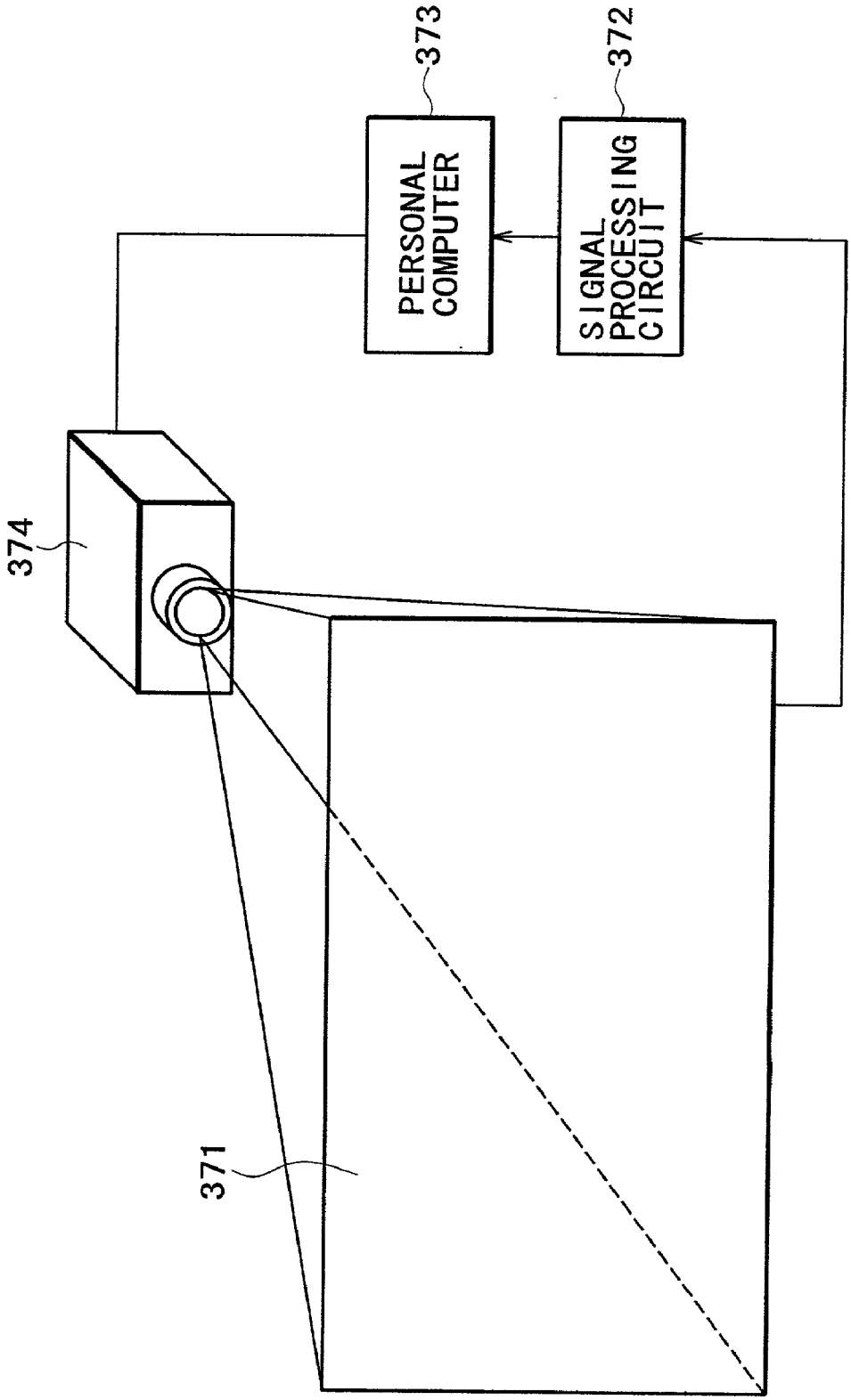
373
PERSONAL COMPUTER
372
SIGNAL PROCESSING CIRCUIT
374
371