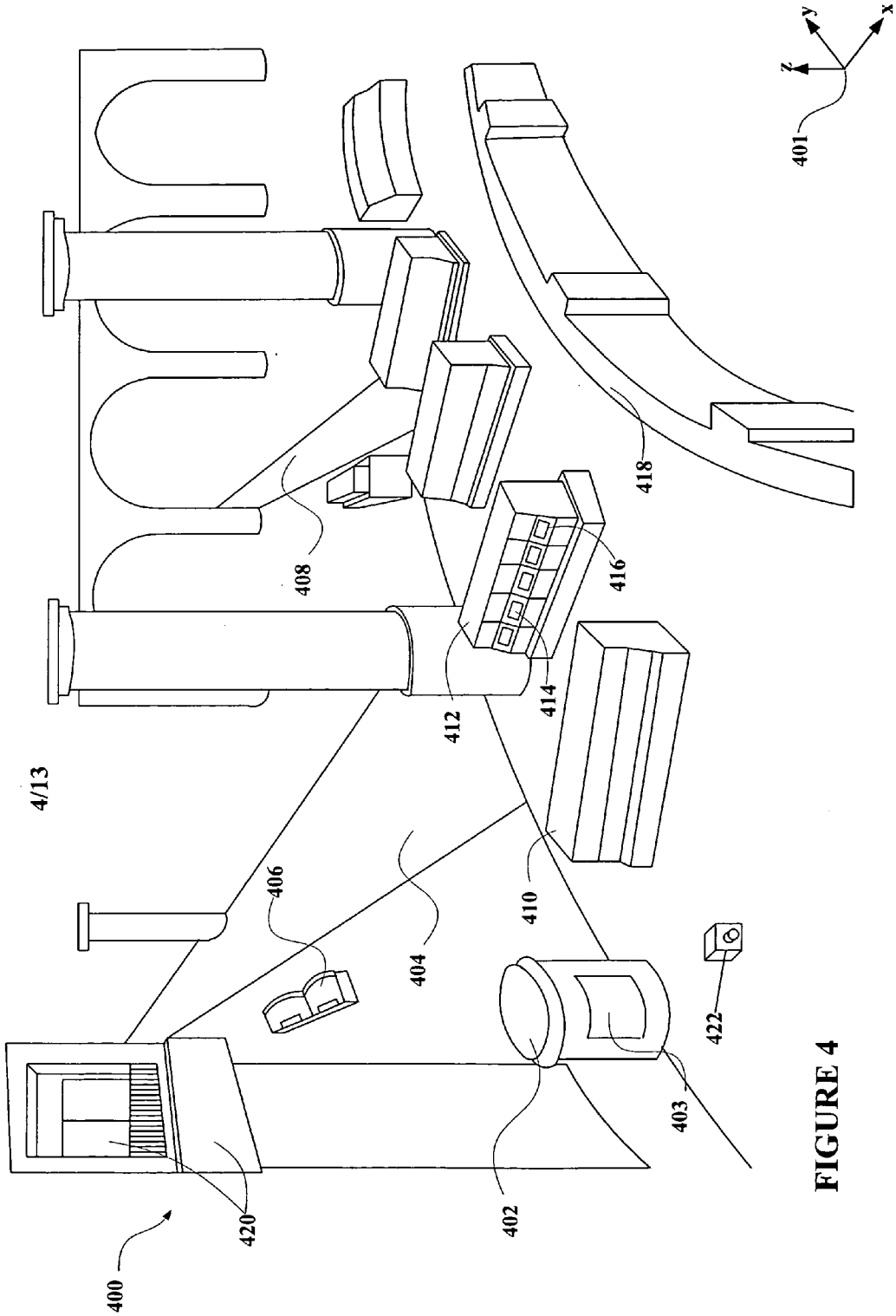

FIGURE 4