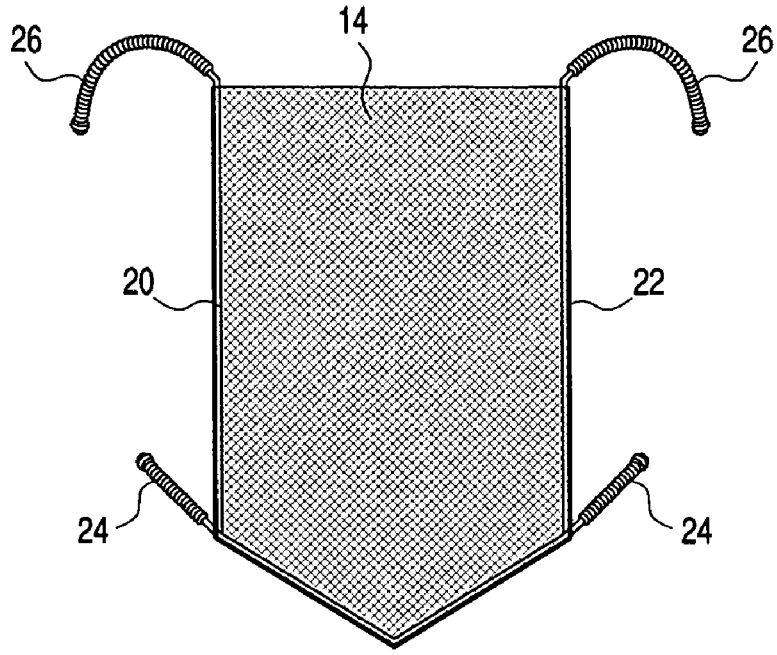

FIG.6A

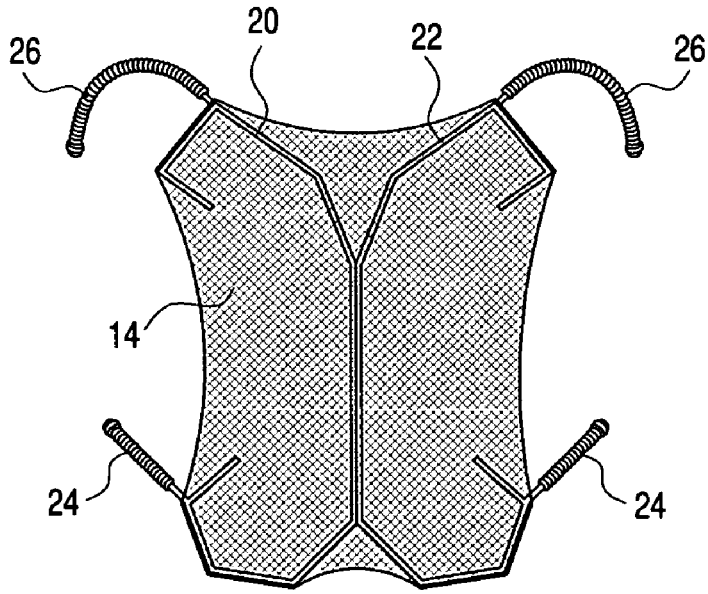

FIG.6B