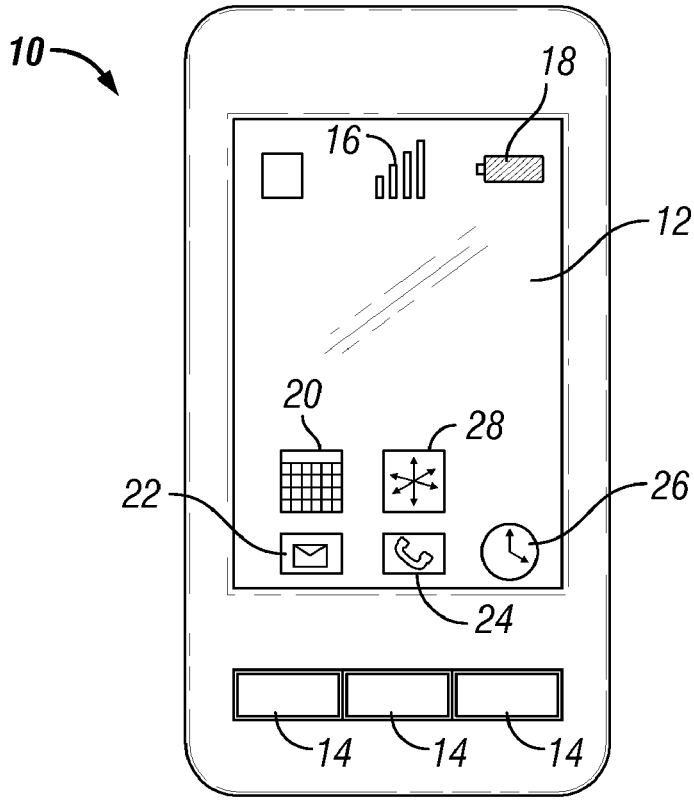
10
18
16
12
20
28
22
26
24
14
14
14

FIG. 1

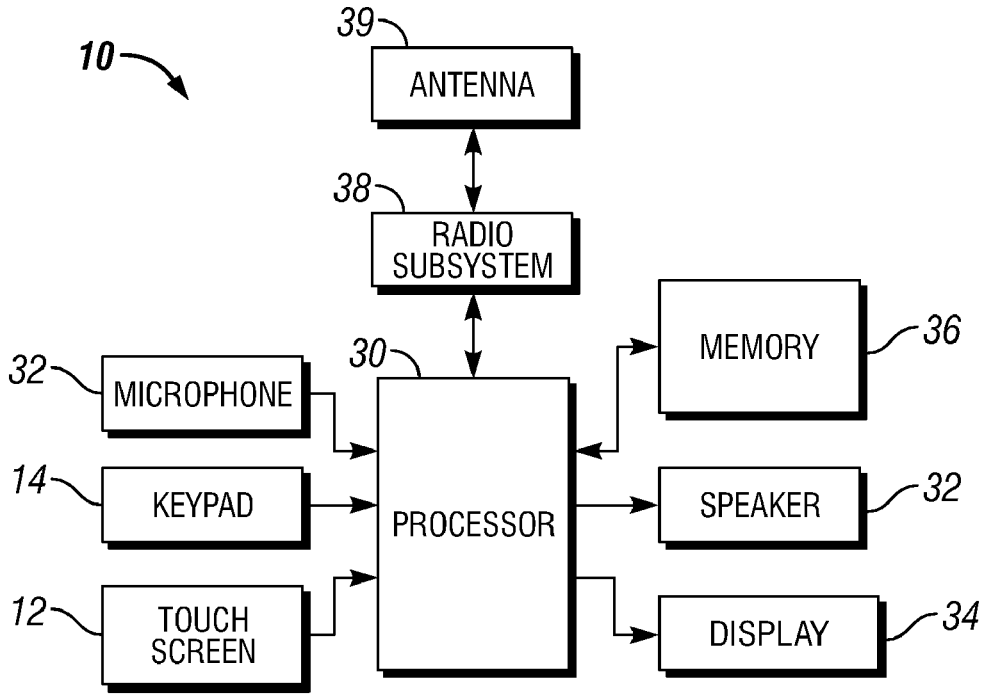
10
39
ANTENNA
38
RADIO SUBSYSTEM
30
MEMORY
36
32
MICROPHONE
14
KEYPAD
PROCESSOR
SPEAKER
32
12
TOUCH SCREEN
DISPLAY
34

FIG. 2