US 20130236699A1

(19) United States

(12) Patent Application Publication

Prest et al.

(10) Pub. No.: US 2013/0236699 A1

(43) Pub. Date: Sep. 12, 2013

(54) **SAPPHIRE LAMINATES**

(71) Applicant: **APPLE INC.**, Cupertino, CA (US)

(72) Inventors: **Christopher D. Prest**, San Francisco, CA (US); **Dale N. Memering**, San Fransisco, CA (US); **David A. Pakula**, San Fransisco, CA (US); **Richard Hung Minh Dinh**, Cupertino, CA (US); **Vincent Yan**, San Francisco, CA (US)

(73) Assignee: **Apple Inc.**, Cupertino, CA (US)

(21) Appl. No.: **13/783,262**

(22) Filed: **Mar. 2, 2013**

Related U.S. Application Data

(60) Provisional application No. 61/607,401, filed on Mar. 6, 2012.

Publication Classification

(51) **Int. Cl.**

B32B 9/00	(2006.01)
B32B 7/00	(2006.01)
B32B 3/02	(2006.01)

(52) **U.S. Cl.**

CPC . ***B32B 9/002*** (2013.01); ***B32B 3/02*** (2013.01); ***B32B 7/00*** (2013.01)

USPC **428/157**; 428/701; 428/220; 156/280; 156/281

(57) **ABSTRACT**
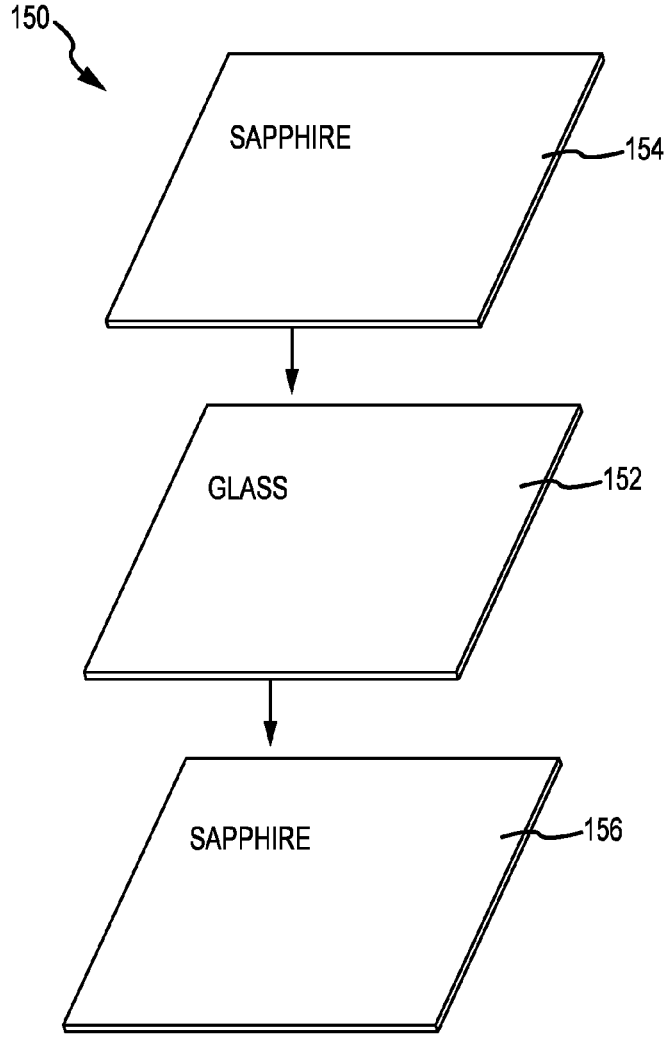
Various sapphire and laminate structures are discussed herein. One embodiment may take the form of a sapphire structure having a first sapphire sheet with a first sapphire plane type forming the major surface and a second sapphire sheet having a second different sapphire plane type forming the major surface. The first and second sapphire sheets are fused together to form the sapphire structure.