FIG. 11

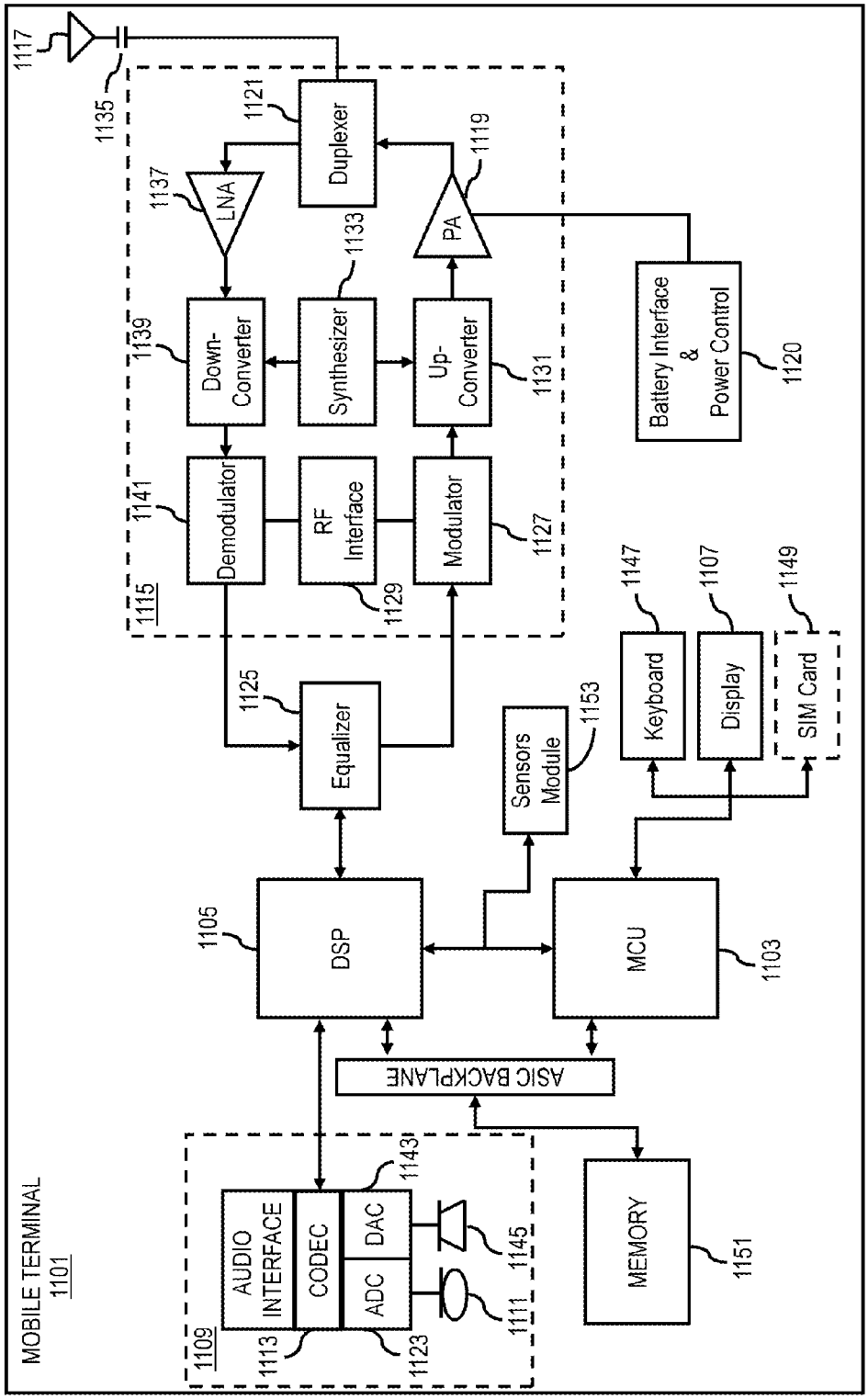
MOBILE TERMINAL
1101
1117
1135
1121
Duplexer
1137
LNA
1119
PA
1133
Synthesizer
1139
Down-Converter
Up-Converter
1131
Battery Interface & Power Control
1120
1141
Demodulator
RF Interface
Modulator
1127
1115
1129
1125
Equalizer
1147
Keyboard
1107
Display
1149
SIM Card
1153
Sensors Module
1105
DSP
MCU
1103
ASIC BACKPLANE
1109
AUDIO INTERFACE
CODEC
DAC
ADC
1143
1145
1111
1113
1123
MEMORY
1151