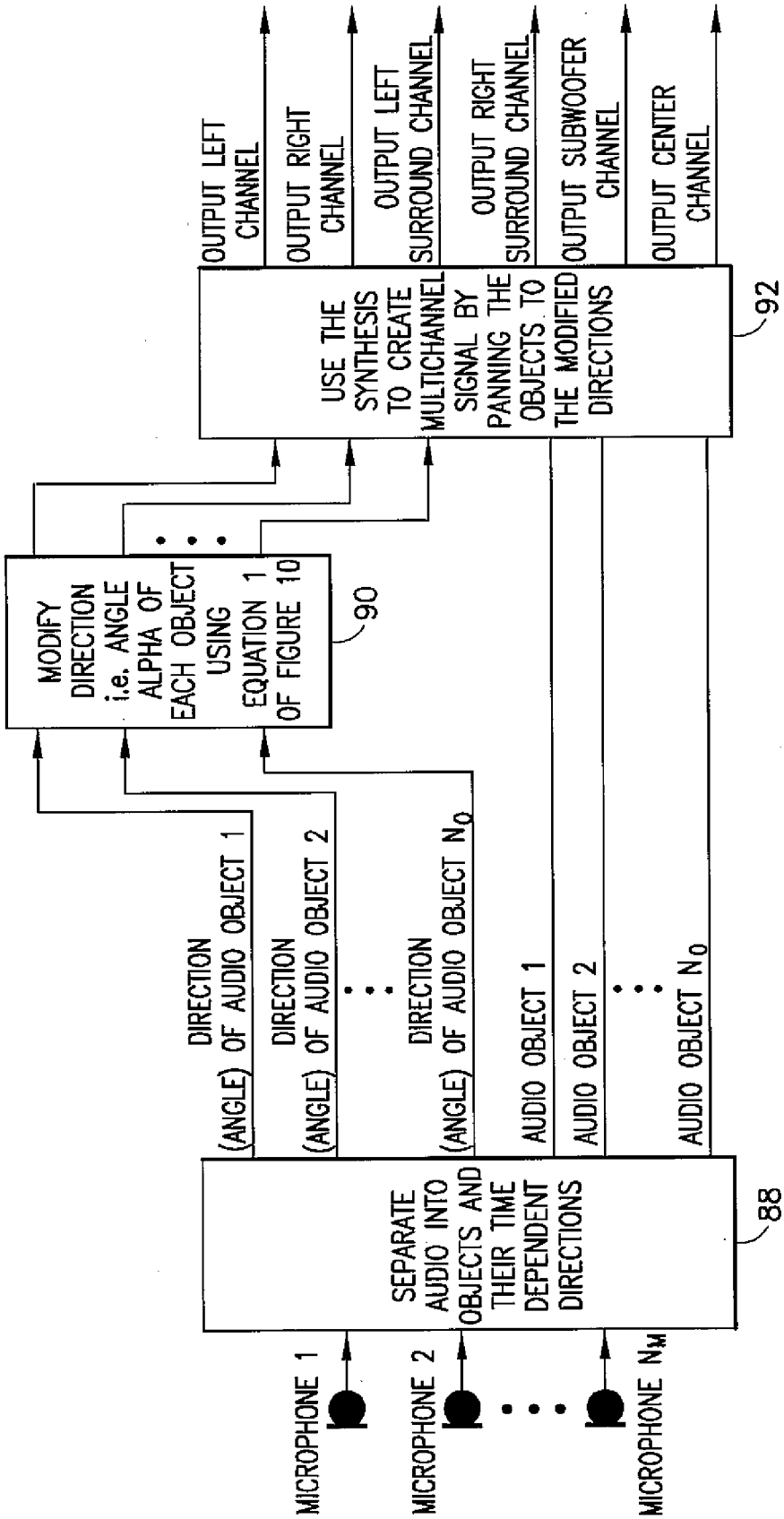
MICROPHONE 1
MICROPHONE 2
MICROPHONE N_M
SEPARATE AUDIO INTO OBJECTS AND THEIR TIME DEPENDENT DIRECTIONS
88
DIRECTION (ANGLE) OF AUDIO OBJECT 1
DIRECTION (ANGLE) OF AUDIO OBJECT 2
DIRECTION (ANGLE) OF AUDIO OBJECT N_O
AUDIO OBJECT 1
AUDIO OBJECT 2
AUDIO OBJECT N_O
MODIFY DIRECTION i.e. ANGLE ALPHA OF EACH OBJECT USING EQUATION 1 OF FIGURE 10
90
USE THE SYNTHESIS TO CREATE MULTICHANNEL SIGNAL BY PANNING THE OBJECTS TO THE MODIFIED DIRECTIONS
92
OUTPUT LEFT CHANNEL
OUTPUT RIGHT CHANNEL
OUTPUT LEFT SURROUND CHANNEL
OUTPUT RIGHT SURROUND CHANNEL
OUTPUT SUBWOOFER CHANNEL
OUTPUT CENTER CHANNEL

FIG.15