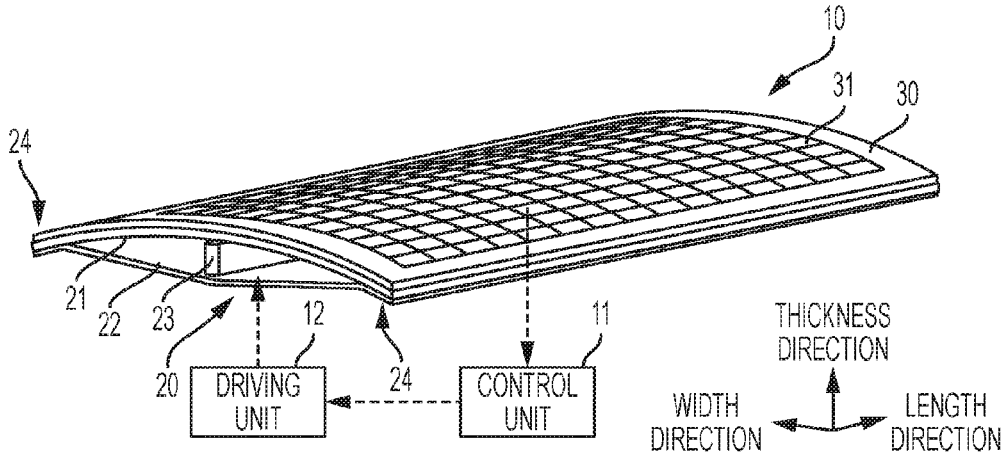
10
31
30
24
21
22
23
20
12
DRIVING UNIT
24
CONTROL UNIT
11
THICKNESS DIRECTION
WIDTH DIRECTION
LENGTH DIRECTION

FIG. 1A

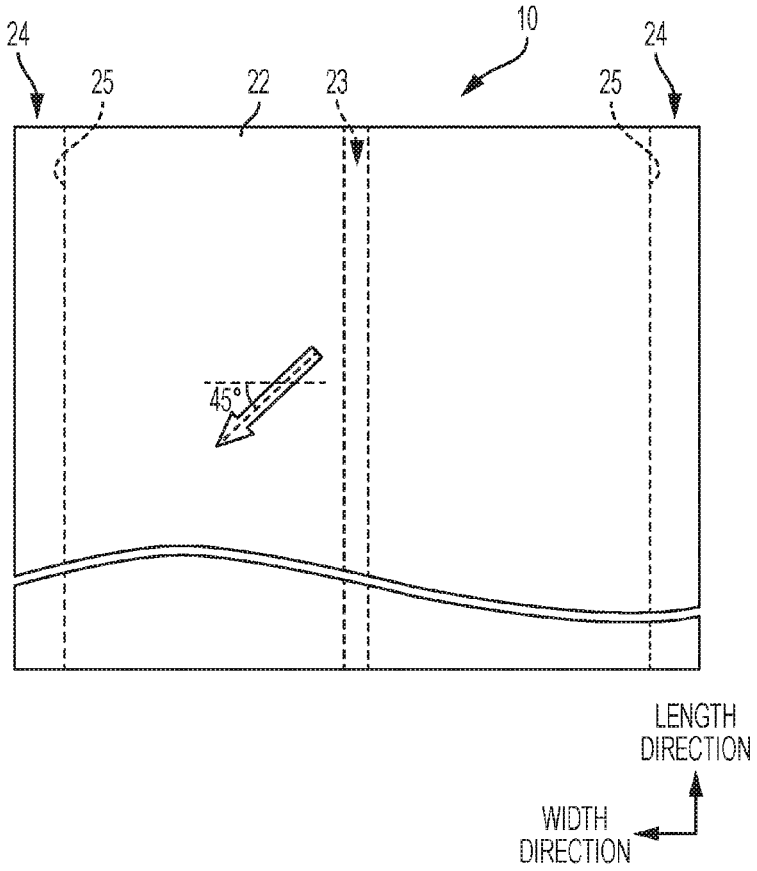
24
25
22
23
10
25
24
45°
LENGTH DIRECTION
WIDTH DIRECTION

FIG. 1B