FIG. 16

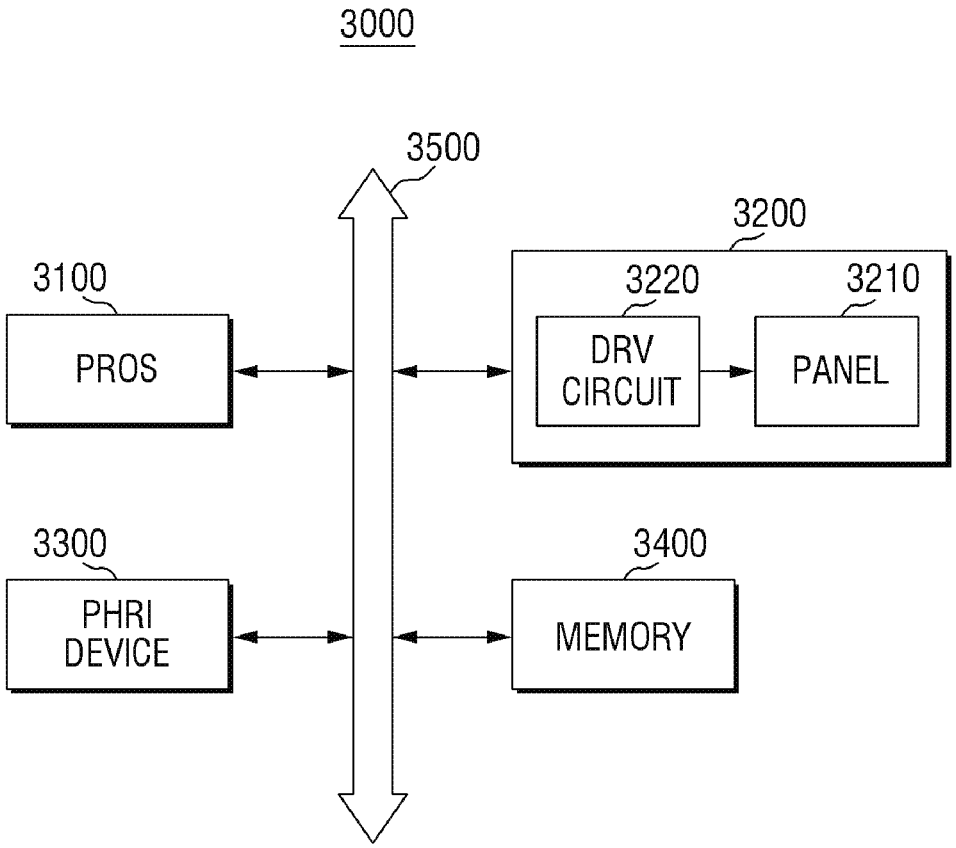
3000
3500
3200
3100
3220
3210
PROS
DRV CIRCUIT
PANEL
3300
3400
PHRI DEVICE
MEMORY