FIG. 2

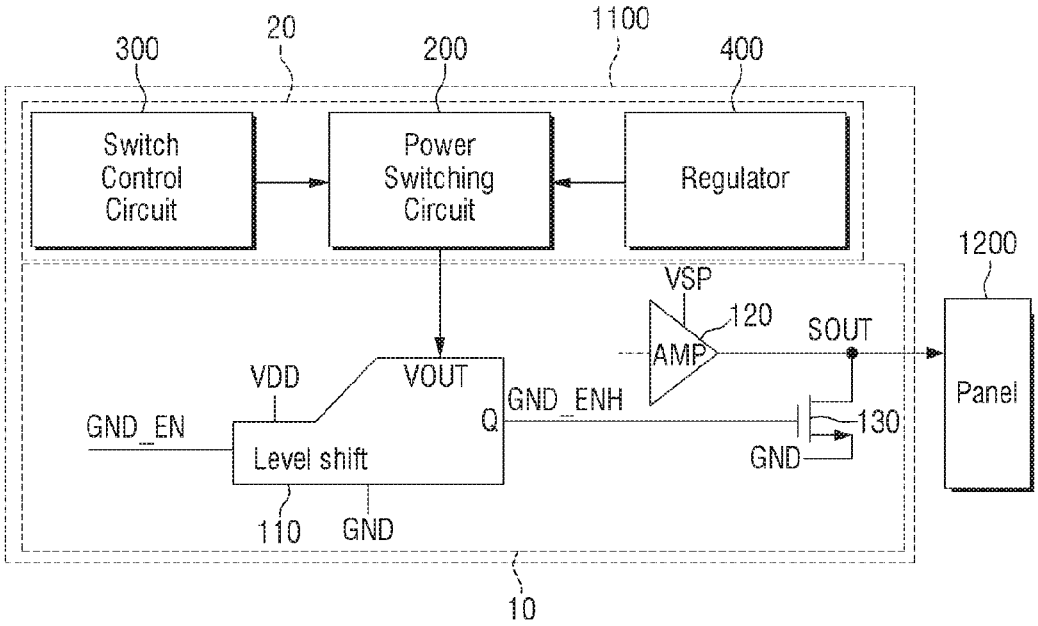
300
20
200
1100
400
Switch Control Circuit
Power Switching Circuit
Regulator
1200
VSP
120
AMP
SOUT
VDD
VOUT
GND_ENH
Q
130
GND_EN
Level shift
GND
Panel
110
GND
10