US 20190344002A1

(19) United States

(12) Patent Application Publication

McGill et al.

(10) Pub. No.: US 2019/0344002 A1

(43) Pub. Date: Nov. 14, 2019

(54) **PUMP CASSETTE AND METHODS FOR USE IN MEDICAL TREATMENT SYSTEM USING A PLURALITY OF FLUID LINES**

(71) Applicant: **DEKA Products Limited Partnership**, Manchester, NH (US)

(72) Inventors: **David W. McGill**, Woodstock, GA (US); **James D. Dale**, Milton, FL (US); **Simon C. Helmore**, San Francisco, CA (US); **Richard J. Lanigan**, Concord, NH (US); **Jason A. Demers**, Manchester, NH (US); **Dean Kamen**, Bedford, NH (US)

(73) Assignee: **DEKA Products Limited Partnership**, Manchester, NH (US)

(21) Appl. No.: **16/507,302**

(22) Filed: **Jul. 10, 2019**

Related U.S. Application Data

(60) Continuation of application No. 16/391,104, filed on Apr. 22, 2019, which is a division of application No. 15/174,969, filed on Jun. 6, 2016, now Pat. No. 10,265,451, which is a division of application No. 12/864,378, filed on Dec. 9, 2010, now Pat. No. 9,358,332, filed as application No. PCT/US09/00436 on Jan. 23, 2009.

(60) Provisional application No. 61/058,469, filed on Jun. 3, 2008, provisional application No. 61/011,967, filed on Jan. 23, 2008.

Publication Classification

(51) **Int. Cl.**

A61M 1/16	(2006.01)
A61M 1/28	(2006.01)
A61M 5/168	(2006.01)
A61M 1/14	(2006.01)

(52) **U.S. Cl.**

CPC ***A61M 1/16*** (2013.01); ***A61M 1/1623*** (2014.02); ***A61M 1/28*** (2013.01); *A61M 2039/1066* (2013.01); ***A61M 5/16809*** (2013.01); ***A61M 1/14*** (2013.01); ***A61M 1/1631*** (2014.02); ***A61M 5/16827*** (2013.01)

(57) **ABSTRACT**
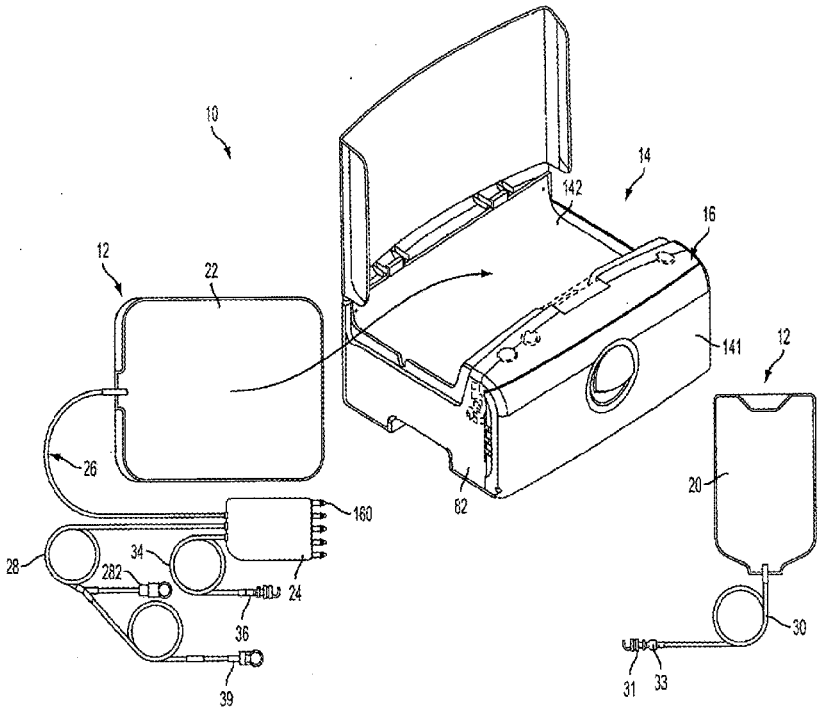
A fluid handling cassette, such as that useable with an automated peritoneal dialysis (APD) cycler device or other infusion apparatus, may include a generally planar body having at least one pump chamber formed as a depression in a first side of the body and a plurality of flowpaths for a fluid that includes a channel. A patient line port may be arranged for connection to a patient line and be in fluid communication with the at least one pump chamber via at least a first one of said flowpaths, and an optional membrane may be attached to the first side of the body over the at least one pump chamber. In one embodiment, the membrane may have a pump chamber portion with an unstressed shape that generally conforms to the depression of the at least one pump chamber in the body and is arranged to be movable for movement of the fluid in a useable space of the at least one pump chamber. One or more spacers may be provided in the at least one pump chamber to prevent the membrane from contacting an inner wall of the at least one pump chamber. The patient line, a drain line, and/or a heater bag line may be positioned to be separately occludable in relation to one or more solution lines that are connectable to the cassette.