US 20190088802A1

(19) United States

(12) Patent Application Publication

Kang et al.

(10) Pub. No.: US 2019/0088802 A1

(43) Pub. Date: Mar. 21, 2019

(54) **MOISTURE-RESISTANT SOLAR CELLS FOR SOLAR ROOF TILES**

(71) Applicant: **TESLA, INC.**, Palo Alto, CA (US)

(72) Inventors: **Yangsen Kang**, Santa Clara, CA (US); **Zhigang Xie**, San Jose, CA (US); **Jianhua Hu**, Palo Alto, CA (US)

(73) Assignee: **TESLA, INC.**, Palo Alto, CA (US)

(21) Appl. No.: **15/709,315**

(22) Filed: **Sep. 19, 2017**

Publication Classification

(51) **Int. Cl.**

H01L 31/0216	(2006.01)
H02S 20/23	(2006.01)
H01L 31/0747	(2006.01)
H01L 31/048	(2006.01)
H01L 31/049	(2006.01)
H01L 31/20	(2006.01)

(52) **U.S. Cl.**

CPC ***H01L 31/02167*** (2013.01); ***H02S 20/23*** (2014.12); ***H01L 31/0747*** (2013.01); ***H01L 31/202*** (2013.01); ***H01L 31/049*** (2014.12); ***H01L 31/0481*** (2013.01); ***H01L 31/208*** (2013.01); ***H01L 31/0488*** (2013.01)

(57) **ABSTRACT**
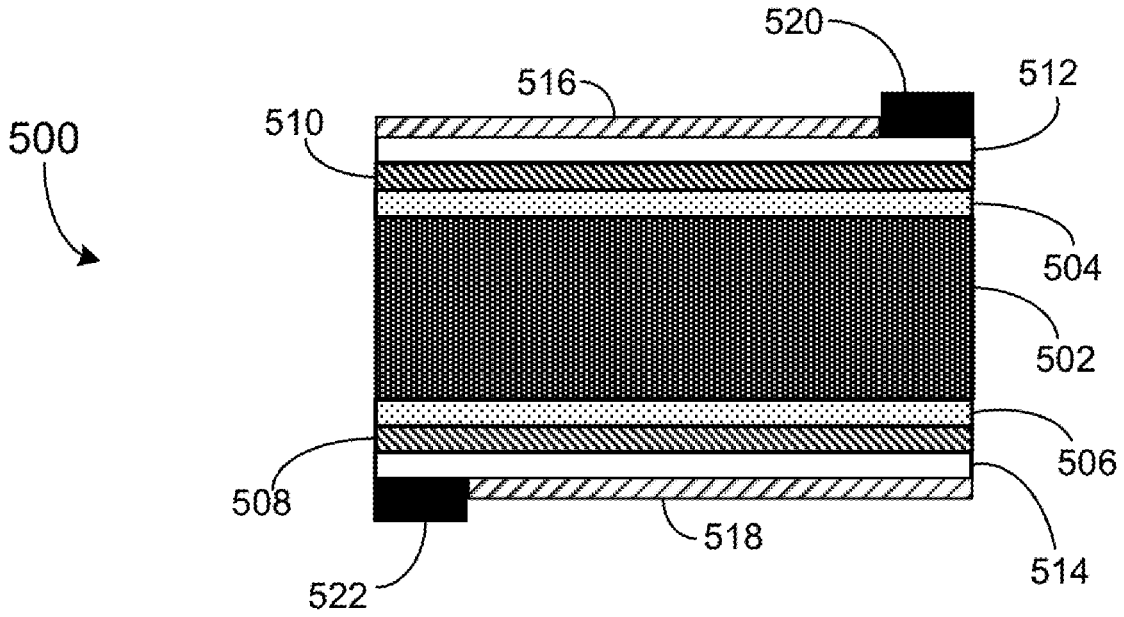
One embodiment can provide a solar module. The solar module can include one or more moisture-resistant photovoltaic structures. A respective photovoltaic structure can include a base layer, an emitter layer positioned on a first side of the base layer, and a moisture barrier layer positioned on a first side of the emitter layer, thereby reducing the amount of moisture that reaches a junction between the base layer and the emitter layer.