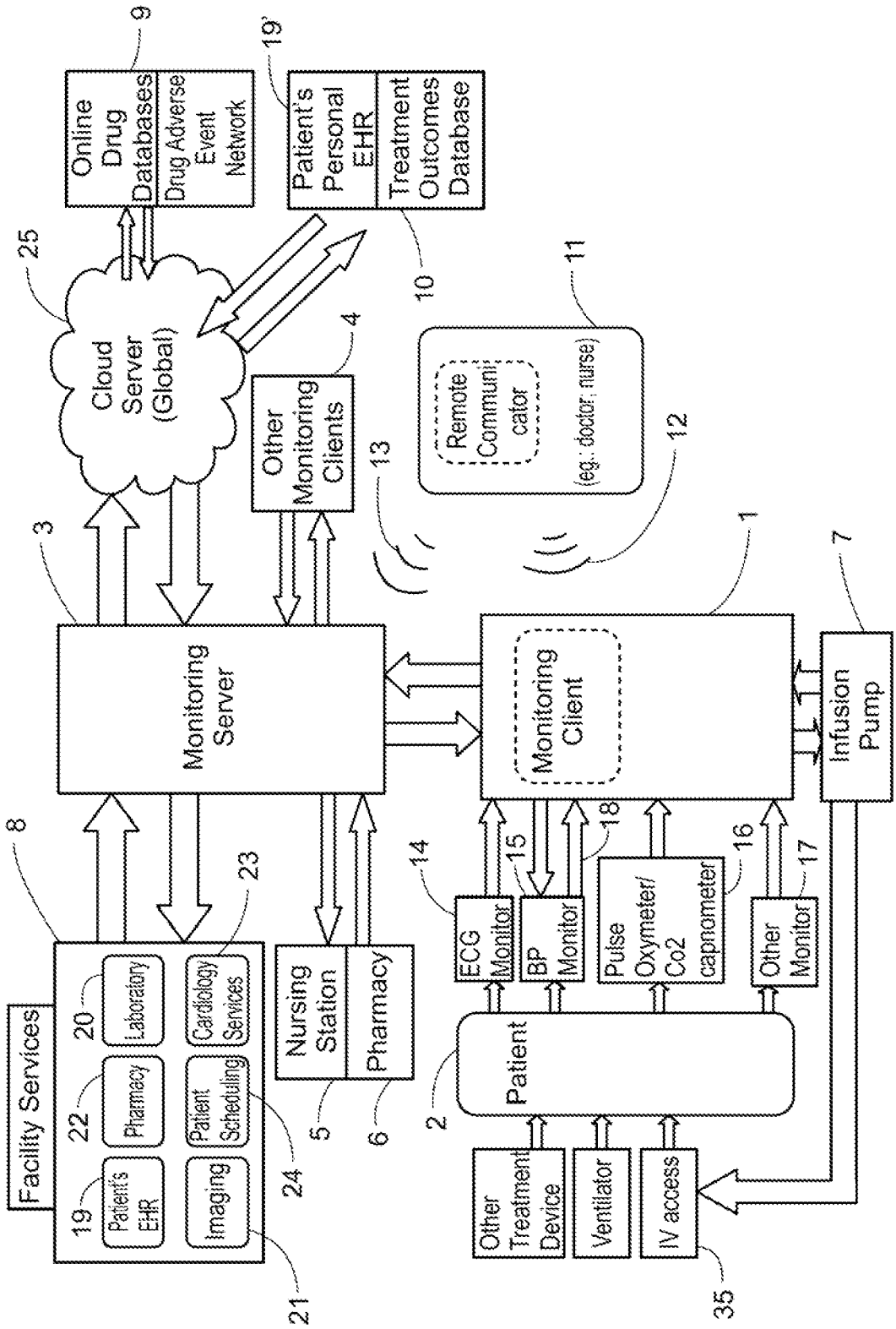
Online Drug Databases
Drug Adverse Event Network
9
Patient's Personal EHR
Treatment Outcomes Database
19'
10
Cloud Server (Global)
25
Other Monitoring Clients
4
Remote Communicator
(eg.: doctor, nurse)
11
12
13
3
Monitoring Server
1
Monitoring Client
Infusion Pump
7
8
Facility Services
Patient's EHR
19
Laboratory
20
Pharmacy
22
Imaging
Patient Scheduling
Cardiology Services
23
24
21
Nursing Station
5
Pharmacy
6
ECG Monitor
14
BP Monitor
15
18
Pulse Oxymeter/ Co2 capnometer
16
Other Monitor
17
Patient
2
Other Treatment Device
Ventilator
IV access
35

FIG. 1