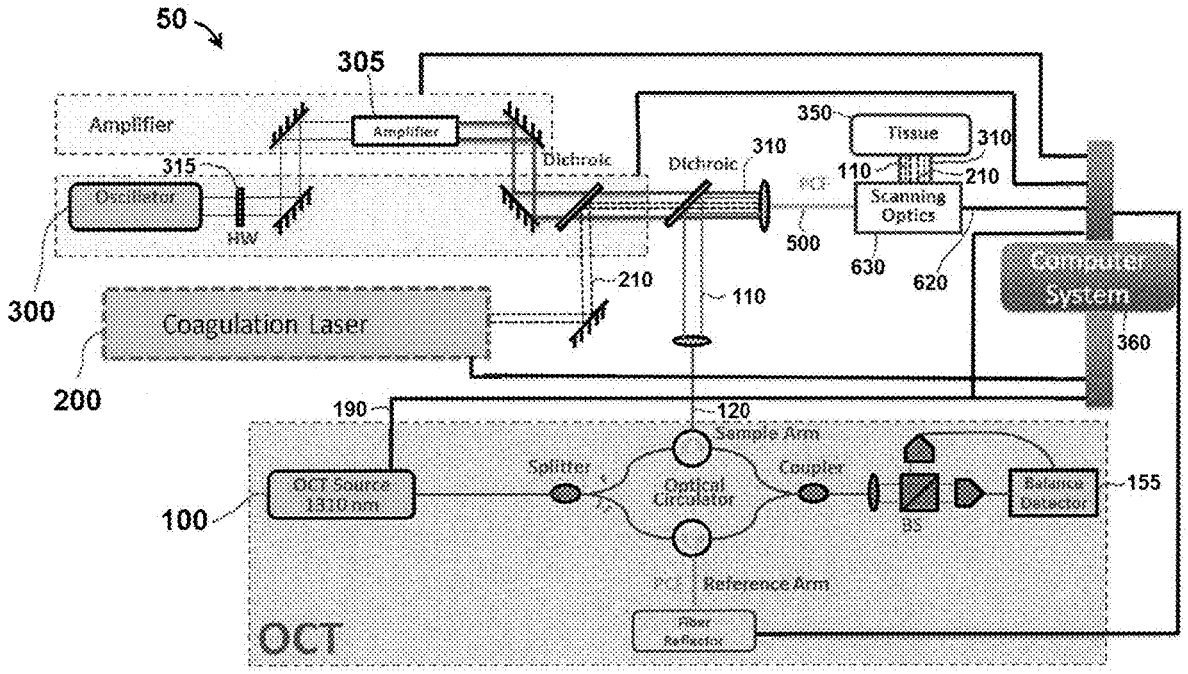
50
305
Amplifier
Amplifier
315
Oscillator
HW
300
Dichroic
Dichroic
310
350
Tissue
310
110
210
Scanning Optics
500
630
620
Computer System
360
210
110
Coagulation Laser
200
190
120
Sample Arm
100
OCT Source 1310 nm
Splitter
Optical Circulator
Coupler
BS
Balance Detector
155
Reference Arm
Fiber Reflector
OCT

FIG. 1