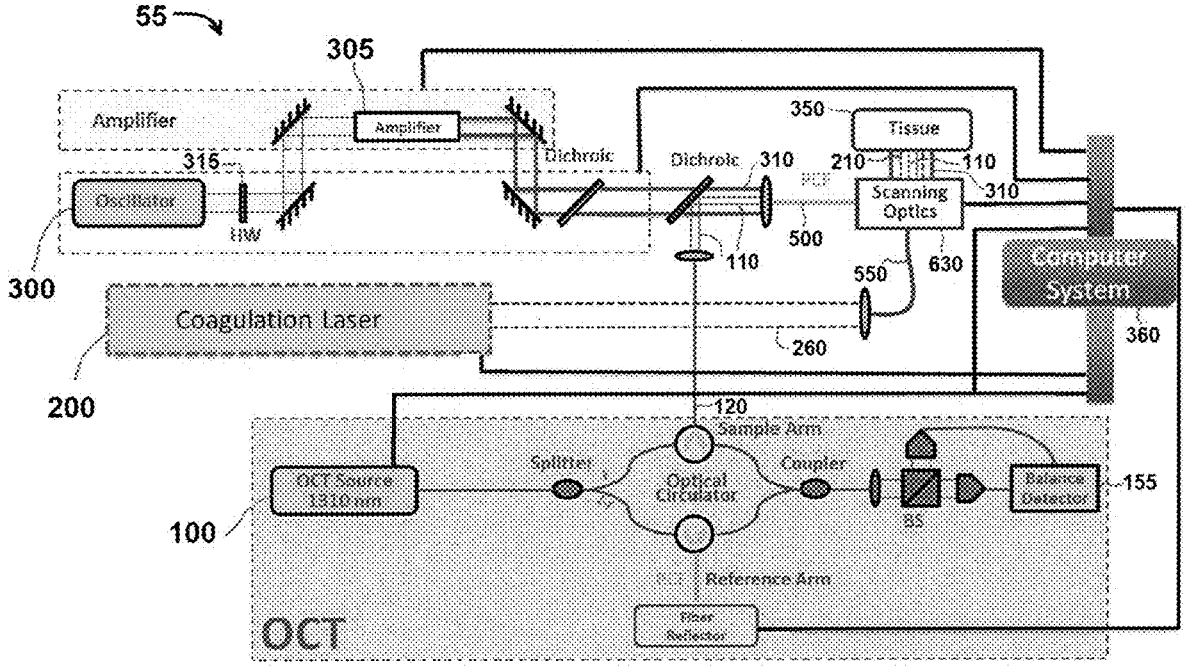
55
305
Amplifier
Amplifier
315
Oscillator
BW
300
Dichroic
Dichroic
310
350
Tissue
210
110
Scanning Optics
310
500
110
550
630
Computer System
360
Coagulation Laser
260
200
120
Sample Arm
OCT Source 1330 nm
Splitter
Optical Circulator
Coupler
BS
Balance Detector
155
100
Reference Arm
Fiber Reflector
OCT

FIG. 2